# 2T250FIMX27-M

## MOTORE

## ENGINE

14/10/2026

TM MOTO SRL UNIPERSONALE - VIA FANO, 6 - 61122 PESARO – ITALY

**WWW.TM-MOTO.IT**

# SOMMARIO
# TABLE OF CONTENTS

CILINDRO - CYLINDER ..... 3
MOTORINO VALVOLA - ELECTRIC VALVE SYSTEM ..... 6
ALBERO MOTORE + PISTONE + BASAMENTO - CRANKSHAFT + PISTON + CRANKCASE ..... 8
LATO CARTER FRIZIONE - CLUTCH CASE SIDE ..... 10
FRIZIONE CORSE - CLUTCH CORSE ..... 12
CONTRALBERO E PACCO LAMELLARE - BALANCE SHAFT AND REEDS BOX ..... 15
FORCHETTE CAMBIO 5M ..... 18
CAMBIO 5M MX (OPEN CLUTCH F3) - GEARBOX 5S (OPEN CLUTCH F3) ..... 21
ACCENSIONE - IGNITION ..... 24
KIT AVVIAMENTO A PEDALE - KICK START KIT ..... 26

# CILINDRO
# CYLINDER



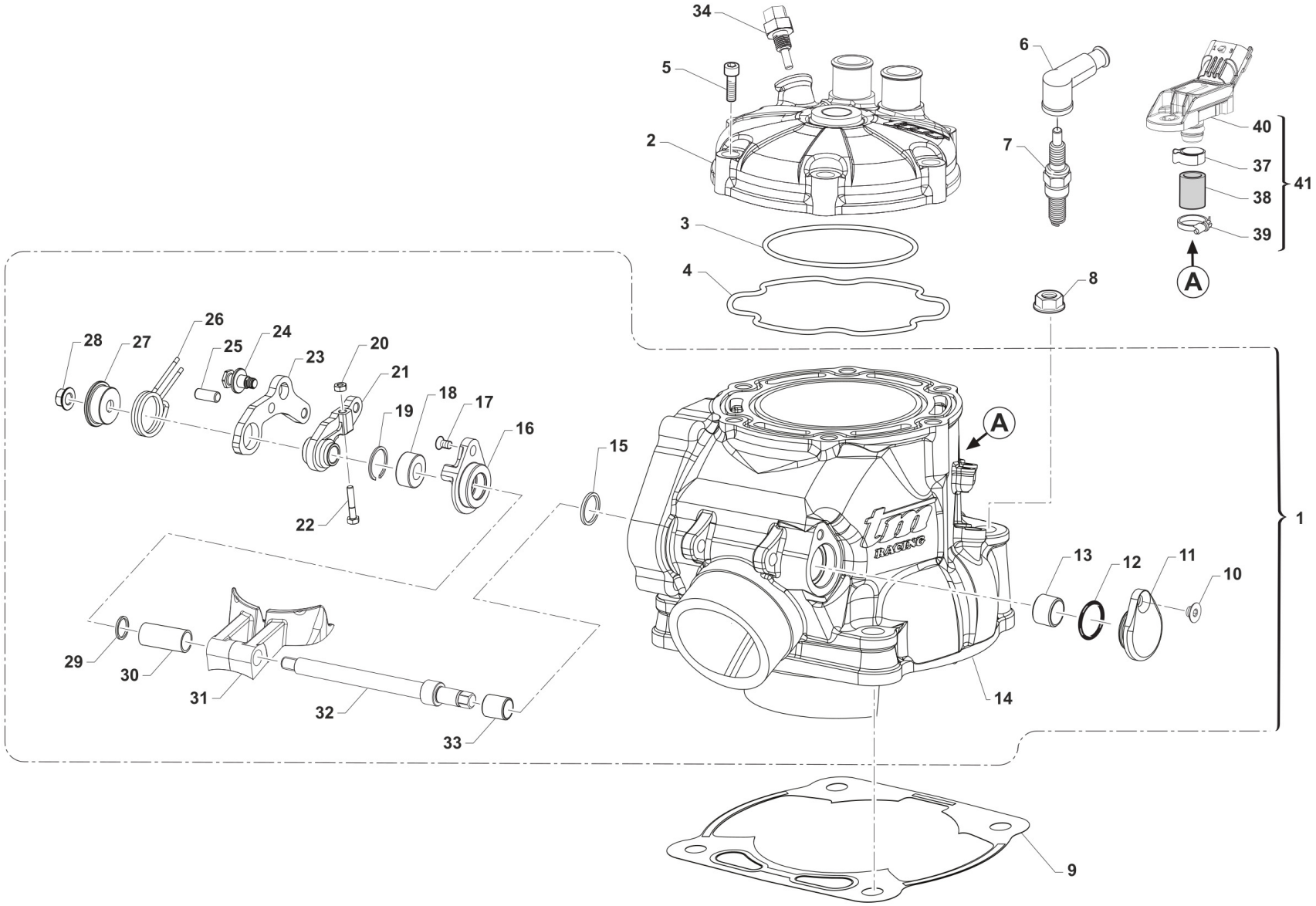


TM 0707

| Pos. | Codice | Q.tà | Note | Descrizione | Description |
|---|---|---|---|---|---|
| 1 | 01266.26 | 1 | | CILINDRO 250 2T FI CPL MY 2026CON ALLOGGIAMENTO SENSORE | |
| 2 | 02257 | 1 | | TESTA 250 2T IE | HEAD 250 2S FI |
| 3 | 12250 | 1 | | O RING TESTA PICCOLO 250 | O-RING, HEAD 250cc LITTLE |
| 4 | 12263 | 1 | | O RING 250/300 SPECIALE TESTA M.15-> | O-RING 250/300 HEAD BIG M.15 |
| 5 | 49503 | 8 | | VITE TCEI 8X35 UNI 5931-912 Brun | BOLT TCEI 8X35 |
| 6 | 21087 | 1 | | PIPETTA CANDELA SILICONE SCHERMATO 5K | |
| 7 | 06036 | 1 | | CANDELA 250/300 2T M19-> NGK BKR8EIX | SPARK-PLUG 250/300 2S MY19-> BKR8EIX |
| 8 | F49874 | 4 | | DADO M 10 X 1,25 CH 12 FLANGIATO | NUT FLANGED M 10x1,25 T.12mm |
| 9 | 05280.20 | 1 | | GUARN. B/CIL 250 sp. 0.2 M.15-> | GASKET, CYL 250 M.15 0,2 |
| 9 | 05280.30 | 1 | | GUARN. B/CIL 250 sp. 0.3 M.15-> | GASKET, CYL 250 M.15 0,3 |
| 9 | 05280.40 | 1 | | GUARN. B/CIL 250 sp. 0.4 M.15-> | GASKET, CYL 250 M.15 0,4 |
| 9 | 05280.50 | 1 | | GUARN. B/CIL 250 sp. 0.5 M.15-> | GASKET, CYL 250 M.15 0,5 |
| 10 | 49399 | 1 | | VITE TSEI 5X12 | BOLT TSEI 5x12 |
| 11 | 30217 | 1 | | TAPPO SX ALB.COM.VALV.PAL.125 | SIDE COVER |
| 12 | F12308 | 1 | | O RING 17,5 - 1,5 | O-RING 17,5 - 1,5 |
| 13 | 19044 | 1 | | GABBIA A RULLI FRENO POST. | NEEDLE BUSH REAR BRAKE PEDAL |
| 14 | 01265.26 | 1 | | CILINDRO 250 Fi 2T NUDO MY 2026 CON ALLOGGIAMENTO SENSORE | |
| 15 | 04115 | 1 | | PARAOLIO G 12X18X3 | OIL SEAL 12x18x3 |
| 16 | 26258 | 1 | | FLANGIA PORTACUSC. ALB.VALV.250/300 Fi 125/144 MY 20/24 | FLANGE, BEARING HOLDER |
| 17 | 49757 | 1 | | VITE TBCE 5 X 12 | BOLT TBCE 5X12 |
| 18 | 03156 | 1 | | CUSCINETTO V.SC.C.12 698LLU/5K | BUSH, EXHAUST VALVE 698LLU |
| 19 | 49220 | 1 | | SEEGER INT.19 | SEEGER I 19 |
| 20 | 49630 | 1 | | DADO M 4 (BASSO) | NUT 4mm, LOW |
| 21 | 28262 | 1 | | LEVA INTERNA COMANDO VALVOLE EES-2 250/300 2019 | LEVER, INTERNAL, 250/300 |
| 22 | 49738 | 1 | | VITE TE 4X20 | BOLT TE 4X20 |
| 23 | 28263 | 1 | | LEVA ESTERNA COMANDO VALVOLE EES-2 | LEVER, EXTERNAL, VALVE |

| Pos. | Codice | Q.tà | Note | Descrizione | Description |
|---|---|---|---|---|---|
| 24 | 26168 | 1 | | PERNO MOLLA EES-2 16066 | PIN, SPRING |
| 25 | F19536 | 1 | | RULLO D. 5 X 12 M6 DIN 6325 | PIN 5X12 |
| 26 | 16066 | 1 | | MOLLA EES-2 | SPRING EES-2 |
| 27 | 26167 | 1 | | PIATTELLO GUIDA MOLLA EES-2 16066 | COLLAR, SPRING |
| 28 | 49676 | 1 | | DADO M 6X1 FLANG. AUTOBL.ACC. | NUT, FLANGED M6 X 1 S.B. |
| 29 | 26130.12 | 1 | | SPESS. REG. CIL.125 2012 1.2 | SPACER CYL. 125 ->12 1.2 |
| 29 | 26130.13 | 1 | | SPESS. REG. CIL.125 2012 1.3 | SPACER CYL. 125 ->12 1.3 |
| 29 | 26130.14 | 1 | | SPESS. REG. CIL.125 2012 1.4 | SPACER CYL. 125 ->12 1.4 |
| 29 | 26130.15 | 1 | | SPESS. REG. CIL.125 2012 1.5 | SPACER CYL. 125 ->12 1.5 |
| 29 | 26130.16 | 1 | | SPESS. REG. CIL.125 2012 1.6 | SPACER CYL. 125 ->12 1.6 |
| 29 | 26130.17 | 1 | | SPESS. REG. CIL.125 2012 1.7 | SPACER CYL. 125 ->12 1.7 |
| 29 | 26130.18 | 1 | | SPESS. REG. CIL.125 2012 1.8 | SPACER CYL. 125 ->12 1.8 |
| 29 | 26130.19 | 1 | | SPESS. REG. CIL.125 2012 1.9 | SPACER CYL. 125 ->12 1.9 |
| 30 | 26147 | 1 | | BOCCOLA DIST. CIL. 250/300 2015 + 125 2020 | BUSH |
| 31 | 22261.19 | 1 | | VALVOLE SCARICO 250 2T ES MY 2019 | VALVES, EXHUAST 250 2S MY19 |
| 32 | 28256 | 1 | | ALBERO COMANDO PALETTE 250 | SHAFT BOOSTER 250/300 |
| 33 | 19061 | 1 | | BOCCOLA IR 8X12X12.5 | BUSH, IR 1X12X12,5 |
| 34 | 08014 | 1 | | SENSORE TEMP. ACQUA TESTA 2T Fi MY19 | SENSOR, WATER TEMPERATURE HEAD 250/300 2T Fi 19-> |
| 37 | 51107 | 1 | | FASCETTA OETIKER 018,5-706R | |
| 38 | 67411.1 | 1 | | TUBO SENSORE 11x17 NERO 27 mm PRETAGLIATO | |
| 39 | 16079 | 1 | | FASCETTA A MOLLA D 17 | |
| 40 | 68315 | 1 | | SENSORE PRESSIONE CARTER 2T INJ. | |
| 41 | 68315.1 | 1 | | SENSORE PRESSIONE CARTER 2T INJ. CPL DI TUBO E FASCETTE | |

# MOTORINO VALVOLA
# ELECTRIC VALVE SYSTEM



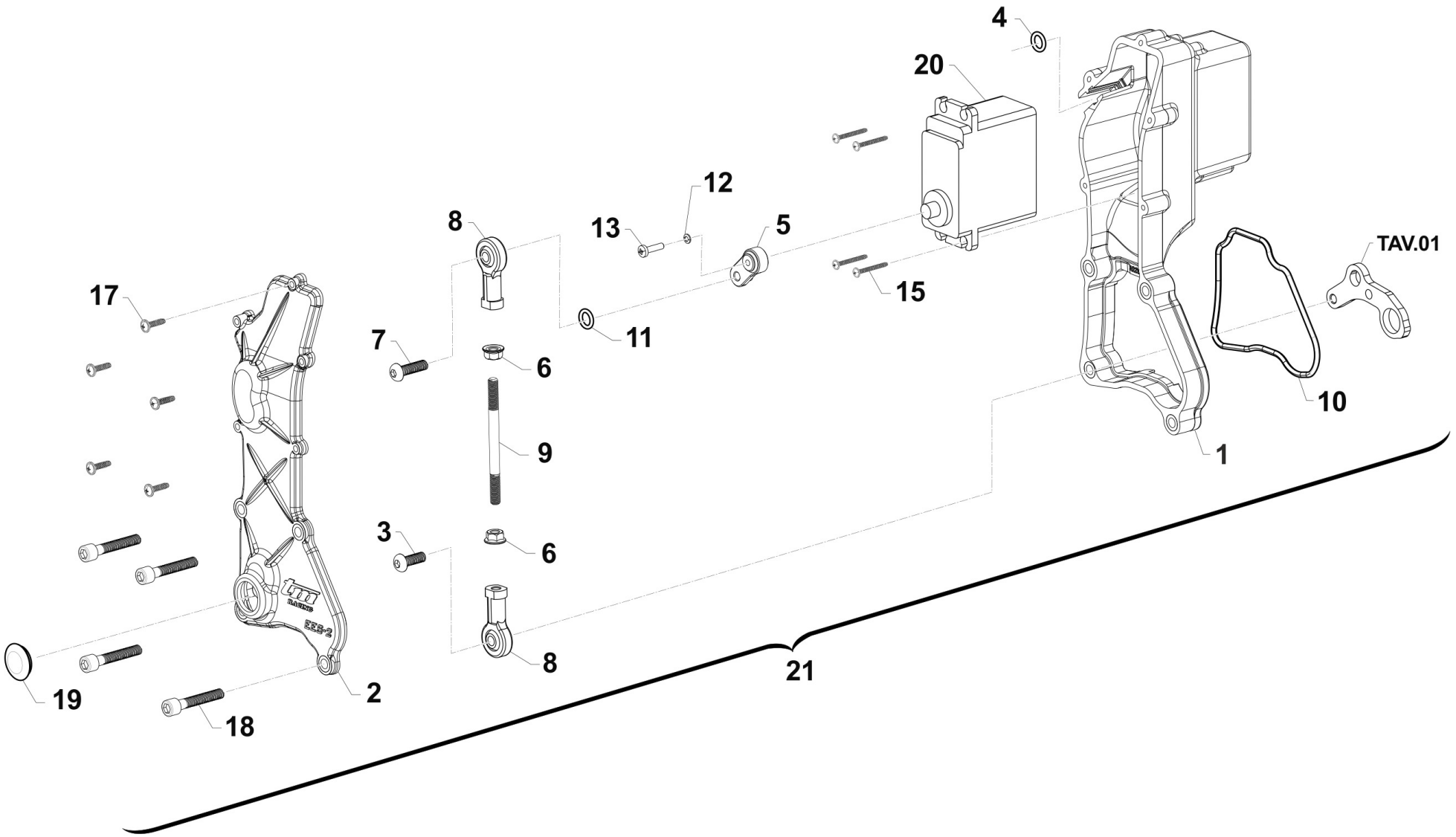


TM 0709

# MOTORINO VALVOLA
# ELECTRIC VALVE SYSTEM



| Pos. | Codice | Q.tà | Note | Descrizione | Description |
|---|---|---|---|---|---|
| 1 | 30285 | 1 | | CARTER EES-2 250/300 2T IE | BOX, PLASTIC |
| 2 | 30286 | 1 | | COPERCHIO CARTER EES-2 250/300 2T IE | COVER, PLASTIC |
| 3 | 49472 | 1 | | VITE TCEI 5X12 UNI 5931-912 Brun | BOLT TCEI 5X12 |
| 4 | 12060 | 1 | | O RING CAPICORDA CAVO FRIZIONE | O RING CLUTCH CABLE |
| 5 | 28266.0 | 1 | | LEVA SERVOMOTORE EES-2 DENTATURA 0 | LEVER |
| 5 | 28266.1 | 1 | | LEVA SERVOMOTORE EES-2 DENTATURA 1 | LEVER |
| 6 | 49632 | 2 | | DADO M 5 x 0,8 ZB | NUT 5mm |
| 7 | 49929 | 1 | | VITE 10.9 TBCEI 5 x 18 UNI 7380 | BOLT |
| 8 | 72251 | 2 | | SNODO MECCANISCO VALVOLA EES-2 125/250/300 | JOINT EXHAUST VALVE EES-2 250/300 |
| 9 | 28264 | 1 | | ASTINA COLLEGAMENTO UNIBALL EES-2 250/300 2019 | ROD UNIBALL EES-2 250/300 2S MY19-> |
| 10 | 12042 | 1 | | O RING COP. VALVOLA EES-2 | O-RING |
| 11 | F12301 | 1 | | O RING 106 4T PIOGGIA CAMBIO | O-RING, 106 GEAR F.S. |
| 12 | 49124 | 1 | | RONDELLA SCHNORR ZIG. 2.5 | |
| 13 | 49881 | 1 | | VITE T.C. 2,5X12 | |
| 15 | 49973 | 4 | | VITE STS-Plus KN6031 2.2X20 PLASTICA | BOLT |
| 17 | 490021 | 5 | | VITE TCBL 3.0X 16 FL. X PLAST. | |
| 18 | 49478 | 4 | | VITE TCEI 5X30 UNI 5931 | BOLT TCEI 5X30 |
| 19 | 21009 | 1 | | TAPPO GOMMA COPERCHIO VALV.SC. | RUBBER, COVER |
| 20 | 22500 | 1 | | SERVOMOTORE VALV.SCARICO HITEC | EL. ENGINE EXHAUST VALVE HITEC |
| 21 | 22503.19 | 1 | | SERVOMOTORE V/SC. CPL 250/300 ES MY 2019 | EL. ENGINE EXHAUST, ASSY |

# ALBERO MOTORE + PISTONE + BASAMENTO
# CRANKSHAFT + PISTON + CRANKCASE



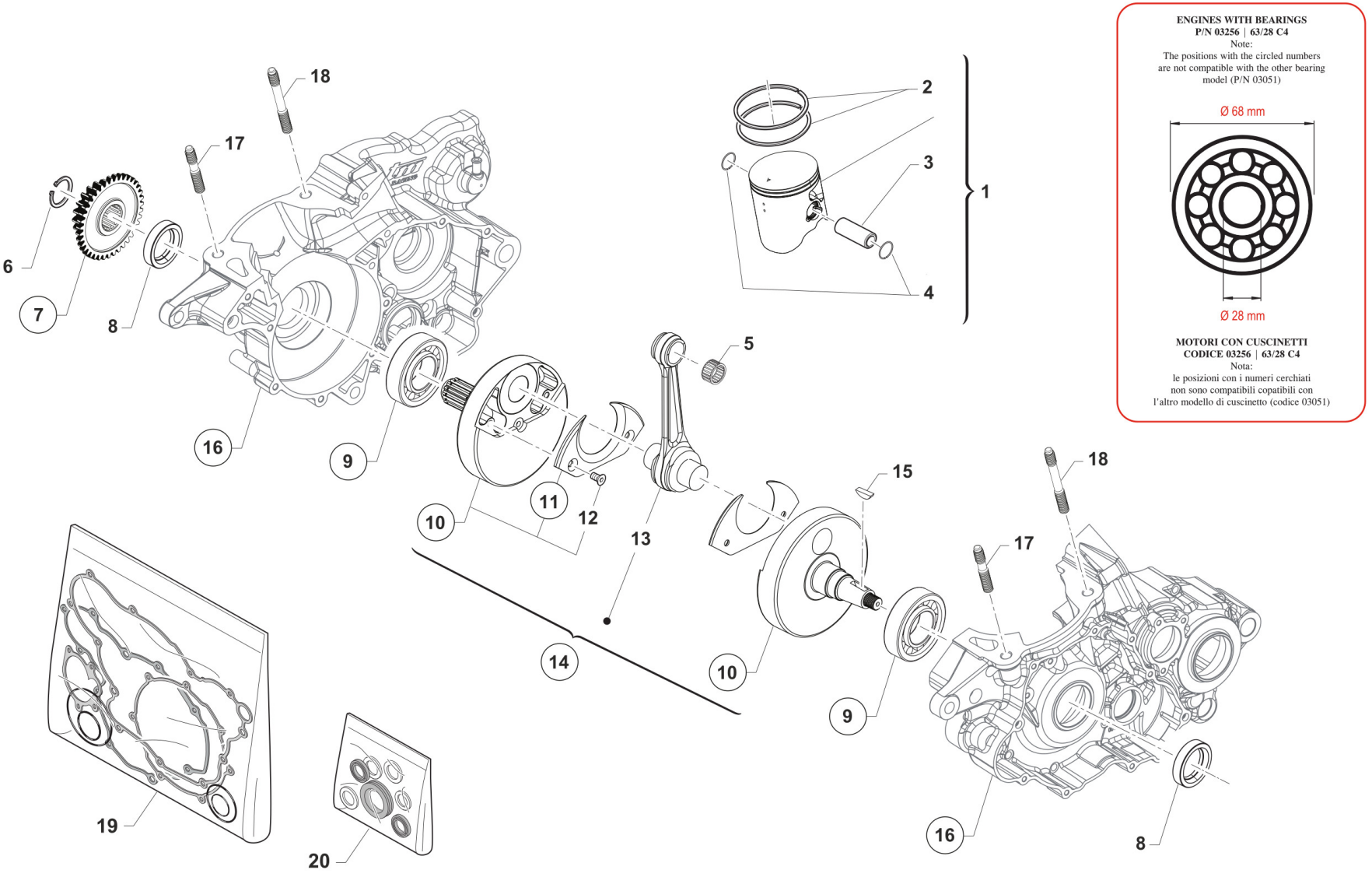


**ENGINES WITH BEARINGS**
**P/N 03256 | 63/28 C4**
Note:
The positions with the circled numbers
are not compatible with the other bearing
model (P/N 03051)

Ø 68 mm

Ø 28 mm

**MOTORI CON CUSCINETTI**
**CODICE 03256 | 63/28 C4**
Nota:
le posizioni con i numeri cerchiati
non sono compatibili copatibili con
l'altro modello di cuscinetto (codice 03051)

TM 0202

# ALBERO MOTORE + PISTONE + BASAMENTO
# CRANKSHAFT + PISTON + CRANKCASE



| Pos. | Codice | Q.tà | Note | Descrizione | Description |
|---|---|---|---|---|---|
| 1 | 10513.33 | 1 | | PISTONE 66,33 2F 250 CPL M. 19-> | PISTON 66,33 2S 250 ASSY MY19-> |
| 1 | 10513.34 | 1 | | PISTONE 66,34 2F 250 CPL M.19-> | PISTON 66,34 2 RINGS |
| 1 | 10513.35 | 1 | | PISTONE 66,35 2F 250 CPL M.19-> | PISTON 66,35 2 RINGS |
| 1 | 10513.36 | 1 | | PISTONE 66,36 2F 250 CPL M.19-> | PISTON 66,36 2 RINGS |
| 2 | 11251 | 2 | | SEGMENTO 250 CC | PISTON RING 250cc |
| 3 | 09250 | 1 | | SPINOTTO PISTONE 250/300cc | PIN, PISTON 250/300cc |
| 4 | 09251 | 2 | | ANELLINO FERMA SPINOT.250/300 | CLIP, PISTON PIN 250/300 |
| 5 | 19250 | 1 | | GABBIA SPINOTTO 250/300 cc | TOP END BUSH 250/300cc |
| 6 | 49252 | 1 | | SEEGER PIGNONE CATENA 250 E 25 | CIRCLIP D.25 FRONT SPROKET 250 |
| 7 | 40284 | 1 | | PIGNONE C.PRIM. 2T 250/300 ES Z 20 CUSC. 28x68x18 | PRIMARY DRIVE GEAR 2S 250/300 20T BEARING 03256 |
| 8 | 04112.1 | 2 | | PARAOLIO 25X38X7 FKM 250/300 | OIL SEAL 25x38x7 FKM |
| 9 | 03256 | 2 | | CUSCINETTO 63/28 C4 | BEARING 63/28 C4 |
| 10 | 18268.1 | 1 | | COPPIA SEMIALBERI 250/300 ES MY 24/25 PER CUSCINETTI 03256 | CRANKSHAFT LH+RH 2S 250/300 ES FOR BEARING 03256 |
| 11 | 18292 | 2 | | GUANCETTA SEMIALB. 250/300Fi 2023 | |
| 12 | 49404 | 4 | | VITE TSEI 6X16 | BOLT TSEI 6x16 |
| 13 | 18246 | 1 | | BIELLA 250/300 M.05/-> P. CPL | CONROD KIT, 250/300 M.05/-> |
| 14 | 18299 | 1 | | ALBERO MOTORE 250/300 2T ES PER CUSCINETTI 03256 MY 24/25 | CRANKSHAFT ASSY 2S 250/300 ES FOR BEARING P/N 03256 |
| 15 | 49012 | 1 | | CHIAVETTA 19 x 7,5 x 5 | WOODRUFF KEY, 250/300 19x7,5x5 |
| 16 | 30398 | 1 | | BASAMENTO MOTORE 250 2T ES MY 24/25 PER CUSCINETTI 03256 | CRANKCASE 2S 250 ES FOR BEAEING 03256 |
| 17 | 49044 | 2 | | PRIGIONIERO CARTER/CILIND.250/300 ES Ant. | STUD, M10 X 1.25 L.57 |
| 18 | 49045 | 2 | | PRIGIONIERO CARTER/CILIND. 250/300 ES Post. | STUD, M10 X 1.25 L.81,5 |
| 19 | 05610.20 | 1 | | KIT GUARNIZIONI + OR 250cc 2T ES MY2020 | GASKETS + OR 250 2S ES MY 2020 |
| 20 | 04029.19 | 1 | | KIT PARAOLI 250/300 2T ES MY 2019 | OIL SEAL KIT 250/300 2T ES MY 2019 |

# LATO CARTER FRIZIONE
# CLUTCH CASE SIDE



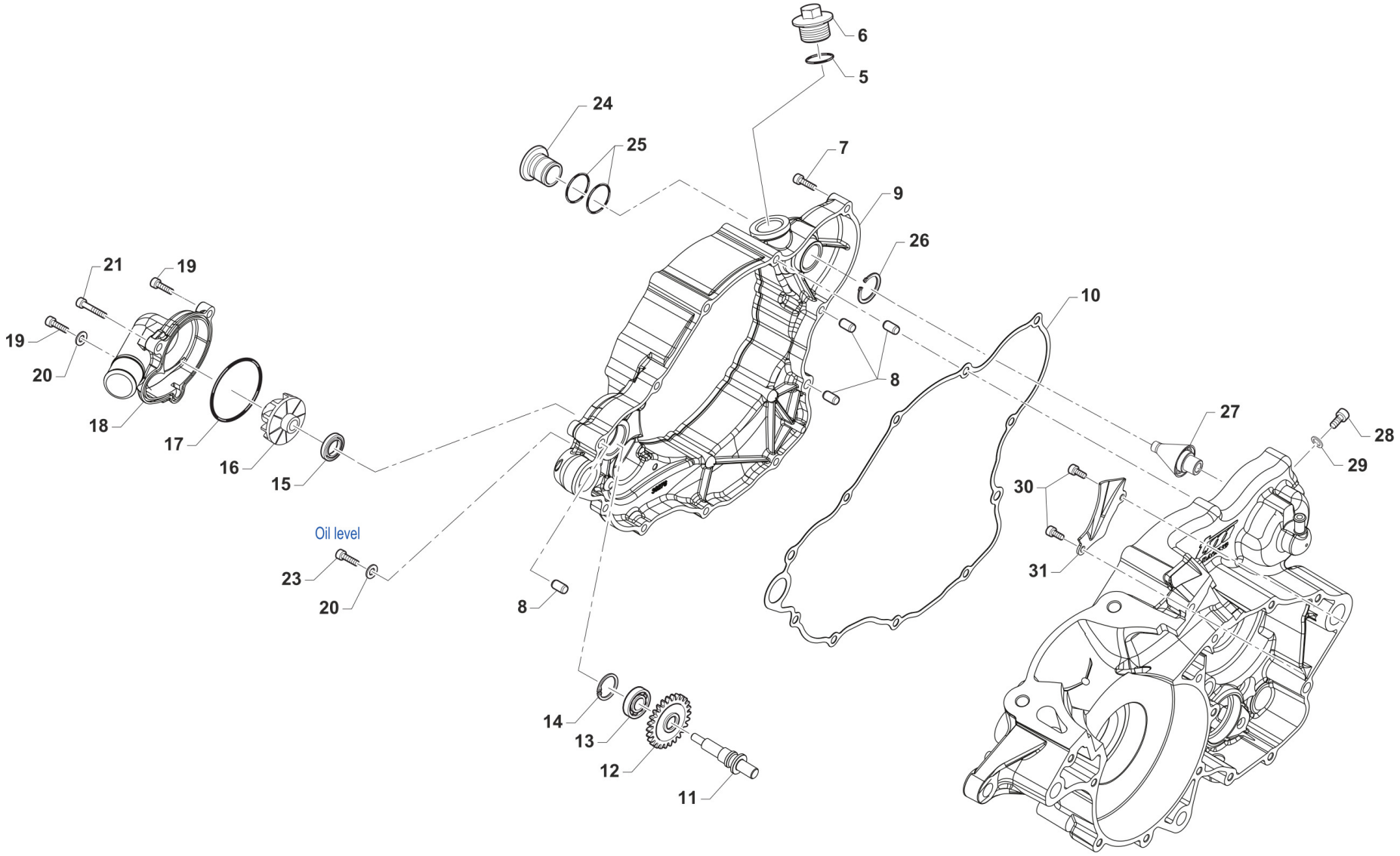


TM 0200.01

| Pos. | Codice | Q.tà | Note | Descrizione | Description |
|---|---|---|---|---|---|
| 5 | F49920 | 1 | | RONDELLA ALL 20.4X26X1.5 | WASHER 20,4X26X1,5 ALUM. |
| 6 | F49925 | 1 | | TAPPO CARICO OLIO M 20X1.5 | OIL PLUG M20X1,5 |
| 7 | 49477 | 9 | | VITE TCEI 5X25 UNI 5931-912 | BOLT TCEI 5X25 |
| 8 | 26041 | 4 | | GRANO CENTRAGGIO D.7X8 F.5,2 | DOWEL PIN 7 x 8 Hole 5,2 |
| 9 | 30288 | 1 | MY20 | CARTER FRIZIONE 250/300 2020 | COVER, INTERNAL, CLUTCH |
| 10 | 05285 | 1 | MY20 | GUARN. CARTER INT. FRIZ. 250/300 2T ES MY 2020 | GASKET, INT. CLUTCH COVER 250/300 2T ES M 20-> |
| 11 | 28068 | 1 | | ALBERINO POMPA ACQUA 250 SC. | SHAFT WATER PUMP 250 |
| 12 | 40080 | 1 | | INGR COMANDO POMPA H2O 250 Z18 | |
| 13 | 03014 | 1 | | CUSCINETTO 608 ZC3 POMPA SCHER | BUSH, WATER PUMP 608 Z C3 |
| 14 | 49215 | 1 | | SEEGER I22 POMPA ACQUA | CIRCLIP D.22 WATER PUMP |
| 15 | F04363 | 1 | | PARAOLIO 8X22X5 250/09-> | OIL SEAL 8x22x5 (250F/09) |
| 16 | F28679 | 1 | | GIRANTE POMPA ACQUA 250N | IMPELLER, H2O PUMP 250Fi |
| 17 | 12028 | 1 | | OR COP. POMPA H2O 2T 250/300 MY19 + 125 MY25 | O-RING WATER PUMP COVER 2S 250/300 MY.18-> |
| 18 | 30275.20 | 1 | | COPERCHIO POMPA ACQUA 250/300 2T Fi MY 2020 | COVER, WATER PUMP 250/300 2S ES MY 2019 |
| 19 | 49476 | 2 | | VITE TCEI 5X20 UNI 5931-912 | BOLT TCEI 5X20 |
| 20 | 49119 | 2 | | RONDELLA 5 x 9 x 1,5 ALLUMINIO | WASHER, 5 x 9 x 1.5 ALLUMINIUM |
| 21 | 49570 | 1 | | VITE TCEI 5X50 UNI 5931 | SCREW TCEI 5X50 |
| 23 | 49472 | 1 | | VITE TCEI 5X12 UNI 5931-912 Brun | BOLT TCEI 5X12 |
| 24 | 26234 | 1 | | TAPPO FORO ALBERINO M/M 250/300 4T | |
| 25 | 12092 | 2 | | O RING NBR14x2 REGISTRO ALTE VELOCITA' | |
| 26 | F49914 | 1 | | SEEGER E 18 | CIRCLIP E D.18 |
| 27 | 32002 | 1 | | SEPARATORE ARIA OLIO 2T | |
| 28 | 49558 | 1 | | VITE TCEI 8X10 | |
| 29 | F49939 | 1 | | RONDELLA RAME 8 X13 X 1,5 | WASHER COPPER 8,5X13X1,5 |
| 30 | 49580 | 2 | | VITE TCEI 4X10 5931-912 | BOLT |
| 31 | 26162 | 1 | | PIASTRINO CONV.OLIO 250/300 18 | PLATE |

# FRIZIONE CORSE
# CLUTCH CORSE



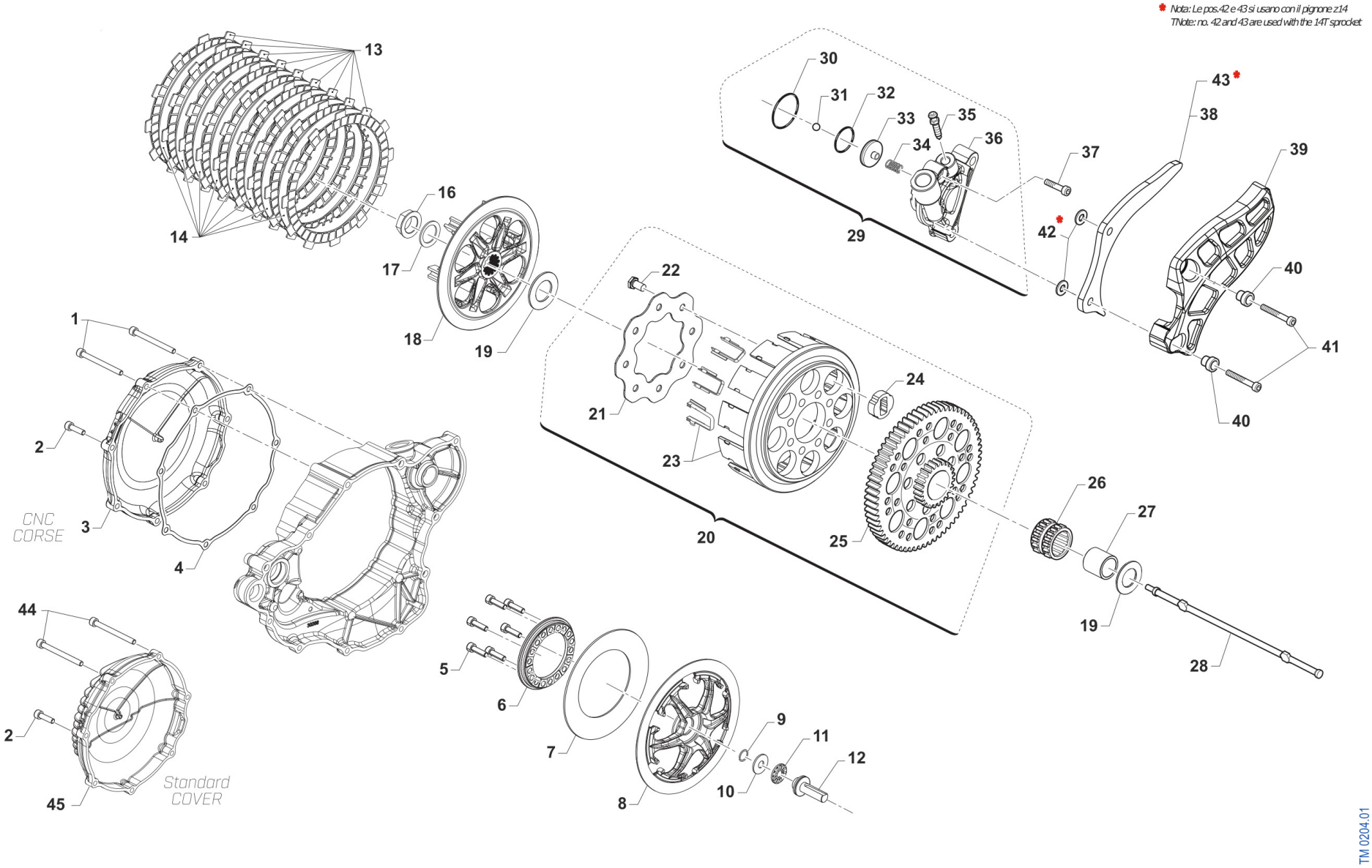


TM 0204.01

| Pos. | Codice | Q.tà | Note | Descrizione | Description |
|---|---|---|---|---|---|
| 1 | 49736 | 2 | | VITE TCEI 5X65 | BOLT TCEI 5X65 |
| 2 | 49476 | 5 | | VITE TCEI 5X20 UNI 5931-912 | BOLT TCEI 5X20 |
| 3 | 30401A | 1 | | COPERCHIO FRIZIONE F3BX- CNC TM CORSE | |
| 4 | 05284 | 1 | | GUARN. COP. FRIZIONE 250/300 2T ES M19-> | GASKET, CLUTCH COVER 250/300 2S ES MY 19 |
| 5 | 490069 | 6 | | VITE 12.9 TCEI 5 x 18 - HEX SOC HD CAP | |
| 6 | 25019 | 1 | | ELEMENTO FISSAGGIO MOLLA | |
| 7 | 16082 | 1 | | MOLLA FRIZIONE 114,8x71x1,55x4,60 (STANDARD) | CLUTCH SPRING 114,8x71x1,55x4,60 (STANDARD) |
| 7 | 16083 | 1 | | MOLLA FRIZIONE 114,8x71x1,55x4,90 (DURA) | CLUTCH SPRING 114,8x71x1,55x4,90 (HARDER) |
| 8 | 25022 | 1 | | SPINGIDISCO FRIZIONE F2XXN F3XXN | |
| 9 | 09006 | 1 | | ANELLINO FERMA SPINOTTO 80/85/100 | CLIP, PISTON PIN 80/85/100cc |
| 10 | 19022 | 1 | | GABBIA A RULLI RAD. AXK 1528 | BUSH CAGE AXK 1528, RADIAL |
| 11 | 19023 | 1 | | RONDELLA GABBIA RULLI AS 1528 | WASHER, NEEDLE CAGE AS 1528 |
| 12 | F35582 | 1 | | FUNGO FRIZIONE IDRAULICA 2015 | PIECE, CLUTCH LIFTER |
| 13 | 35081 | 9 | | DISCO FRIZIONE CONDUTTORE D.138.4 - d.116.6 - s.2 | |
| 14 | 35079 | 8 | | DISCO FRIZIONE CONDOTTO D. 139 SP. 1.2 | |
| 16 | F49816B | 1 | | DADO Ø27.5 - M18 x 1,25 | |
| 17 | 490059 | 1 | | RONDELLA SCHNORR DIN9250 - M18/19x27x1.5 | |
| 18 | 25031 | 1 | | TAMBURELLO FRIZIONE 2T 250/300 F3BBN 9/8 | |
| 19 | 48250 | 2 | | SPESSORE 22X39X2 COPPIA PRIMARIA 250 | SPACER, PRIMARY GEAR 250cc |
| 20 | 40575 | 1 | | COPPIA PRIMARIA CPL 2T 250/300 Z 57 (OPEN CLUTCH F3) | |
| 21 | 35262.1 | 1 | | DISCO BATTUTA GOMMINI FRIZ. 2T/4T F.7 MMPER VITI 49727 | |
| 22 | 49727 | 8 | | VITE PARASTRAPPI K9 M7X1X12.5 | SCREW, M7X1X12,5 K9 ENGINE |
| 23 | 25012 | 1 | | CAMPANA FRIZIONE 250/300 2T PER PACCO DISCHI ACCIAIO | |
| 24 | 21005 | 8 | | GOMMINO PARASTRAPPI FRIZIONE 80 SH | RUBBER, CLUTCH BASKET |
| 25 | 40283 | 1 | | CORONA COPPIA PRIM. 250/300 2T ES Z57 PER PIGNONE Z20 | |
| 26 | F19510 | 1 | | GABBIA A RULLINI K 27X32X23.8 | NEEDLE CAGE 27 x 32 x 23.8 |

| Pos. | Codice | Q.tà | Note | Descrizione | Description |
|---|---|---|---|---|---|
| 27 | F26422 | 1 | | BOCCOLA INGR.TRASM.PRIM. 250N | BUSH, PRIMARY GEAR 250Fi |
| 28 | 35086 | 1 | | ASTINA FRIZIONE 2T 250/300 173,1 F3BB 9/8 | |
| 29 | 30265.19 | 1 | | COP. FRIZ/IDR 2T 250/300 ES MY 2019 CPL | COVER IDR.CLUTCH 250/300 T.S. ES MY19-> ASSY |
| 30 | 12091 | 1 | | O RING CORPO CARTUCCIA FR.COMP | O-RING |
| 31 | F19517 | 1 | | SFERA 5 MM PIST. FRIZ. IDR. | BALL IDR. CLUTCH PISTON 250N |
| 32 | F12365.1 | 1 | | O-RING 2093 (23,52x1,78) EPDM 70Sh | |
| 33 | F35559 | 1 | | PISTONCINO CIL.FRIZ.D.27XRING | PISTON |
| 34 | F16470 | 1 | | MOLLA CONTR. PIST/FRI 450Fi'15 | |
| 35 | 35264 | 1 | | VITE SPURGO OLIO FRIZ.IDR.6X1 | SCREW AIR BLED HYDRAUL.CLUTCH |
| 36 | 30269 | 1 | | COP. FRIZ/IDR NUDO 250/300 M19 | COVER IDR. CLUTCH 2S 250/300 MY19-> |
| 37 | 49474 | 1 | | VITE TCEI 5X16 UNI 5931 | BOLT TCEI 5X16 |
| 38 | 40042 | 1 | | PROTEZIONE PIGNONE ERGAL 250/300 2T ES MY 2019 | PROTECTION, ERGAL |
| 39 | 40075 | 1 | | PROTEZIONE PIGNONE 250/300 ES + 125 es | PROTECTION, PLASTIC |
| 40 | 26211 | 2 | | BOCCOLA PROT. PIGNONE 250 F.5 | COLLAR, SPROCKET 250cc H.5 |
| 41 | 49535 | 2 | | VITE TCEI 5X35 UNI 5931-912 | BOLT TCEI 5X35 |
| 42 | 49601 | 2 | | RONDELLA 5X11 | WASHER 5x11 |
| 43 | 40083 | 1 | | PROTEZIONE PIGNONE ERGAL 250/300 2T PIGN. Z14 | |
| 44 | 49576 | 2 | | VITE TCEI 5X70 | BOLT TCEI 5X70 |
| 45 | 30277 | 1 | | COPERCHIO FRIZIONE 250/300 2T MY'19 | COVER, CLUTCH 250/300 TS M.19-> |

# CONTRALBERO E PACCO LAMELLARE
# BALANCE SHAFT AND REEDS BOX



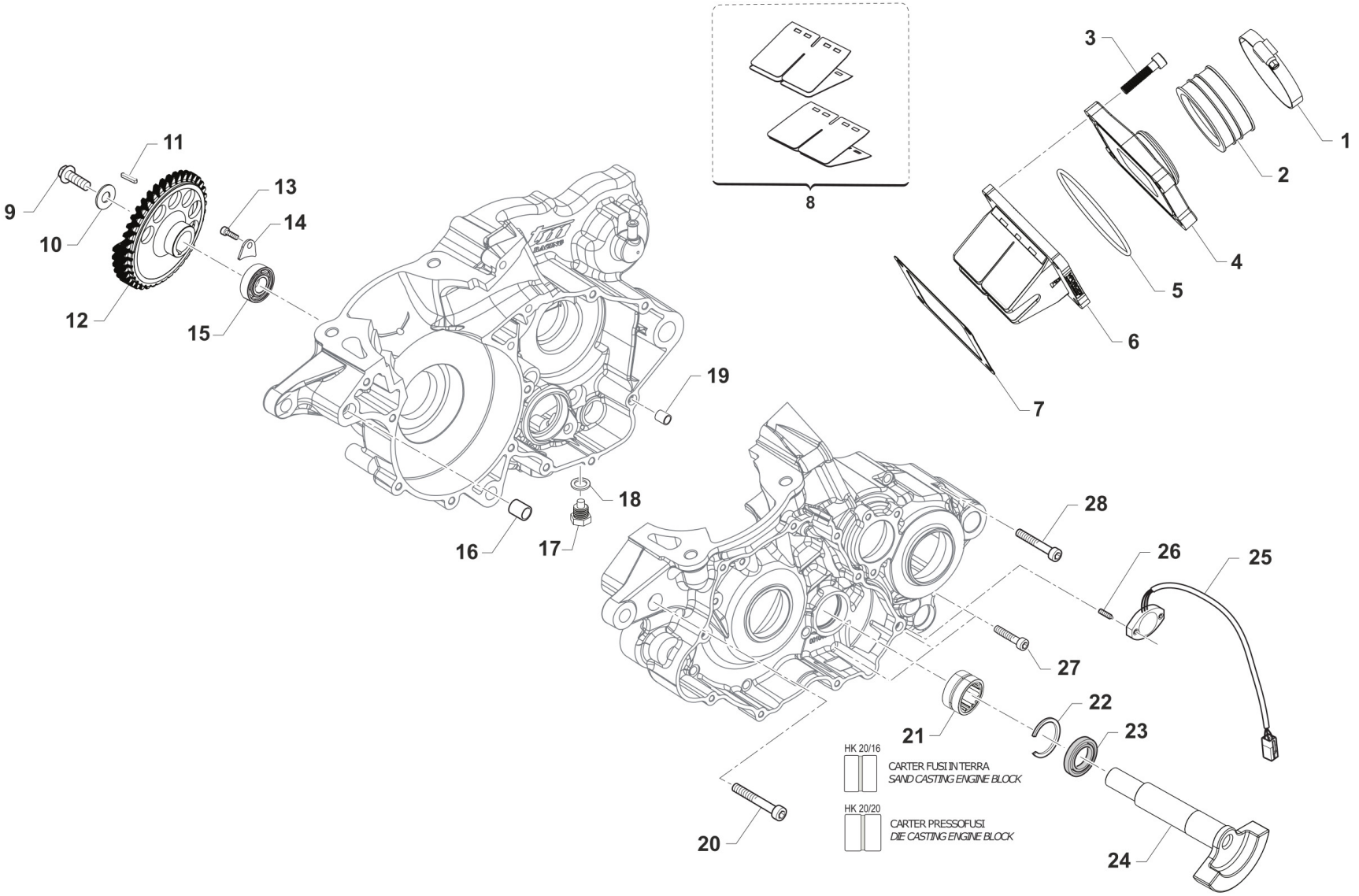


TM 0203.01

# CONTRALBERO E PACCO LAMELLARE
# BALANCE SHAFT AND REEDS BOX



| Pos. | Codice | Q.tà | Note | Descrizione | Description |
|---|---|---|---|---|---|
| 1 | 51054 | 2 | | FASCETTA SM9 D.52 | CLAMP SM9 D.52mm |
| 2 | 13009 | 1 | | MANICOTTO COLLETTORE ASP.97/26 | MANIFOLD RUBBER,INTAKE M.97/14 |
| 3 | 49486 | 4 | | VITE TCEI 6X30 UNI 5931-912 YZPL | BOLT TCEI 6X30 |
| 4 | 30314.14 | 1 | | CONVOGL. P/LAM 250/3 14/-> VF3 | MANIFOLD, INTAKE |
| 5 | 12255 | 1 | | O RING COLLETT.ASP.250/300 14 | O-RING, INLET MANIFOLD 250/300 |
| 6 | 20258 | 1 | | PACCO LAM 250/300 VF3 07/-> | REEDS BOX VF3 250/300 M. 07/-> |
| 7 | 05268 | 1 | | GUARN. PACCO LAMELLE 250 | GASKET, REED BLOCK 250/300 |
| 8 | 20076 | 1 | | LAMELLE V-FORCE3 250/300 07/-> | REEDS, V-FORCE3 250/300 07/-> |
| 9 | 49363 | 1 | | VITE TE F/R 8X16 Ch.10 | BOLT 8X16 T.10mm |
| 10 | 49619 | 1 | | RONDELLA 24 x 3 F. 8/8.5 | |
| 11 | 49969 | 1 | | CHIAVETTA CONTRALBERO 250/300 2T A 3X3X12 | WOODRUFF KEY |
| 12 | 40257 | 1 | | INGR. CONTRALBERO 250/300 M18 | GEAR, BALANCE SHAFT |
| 13 | 49962 | 1 | | VITE TCEI 6X12 BASSA / F.GUIDA | BOLT |
| 14 | 26156 | 1 | | PIASTRINO BLOC.CUSC.C.A.125 OK /250/300 | PLATE, BEARING HOLDER 125 OK |
| 15 | 03049 | 1 | | CUSCINETTO CONTRALBERO MOTO 2T | BUSH, COUNTERSHAFT 2S BIKE |
| 16 | F26428 | 1 | | GRANO RIFERIMENTO 12X13 F10.2 | GRUB SCREW 12X13 H.10,2mm |
| 17 | 49301 | 1 | | TAPPO OLIO C/CALAM. 2T | OIL PLUG WITH MAGNET |
| 18 | 49103 | 1 | | RONDELLA 14X20X1,5 ALLUMINIO | WASHER, 14 X 20 X 1.5 ALUMINUM |
| 19 | F26304 | 1 | | GRANO RIFERIMENTO 6.1X8X9.5 4T | GRUB SCREW 6.5X8XX9.5 4S |
| 20 | 49508 | 1 | | VITE TCEI 8X60 UNI 5931 | BOLT |
| 21 | 19072 | 1 | | ASTUCCIO A RULLI NK 20/16 2T 250/300 ES | |
| 21 | 19078 | 1 | | ASTUCCIO A RULLI NK 20/20 2T 250/300 ES | |
| 22 | F49915 | 1 | | SEEGER I28 FILTRO COPPA OLIO (J28 x fori) | SEEGER OIL FILTER |
| 23 | 04035 | 1 | | PARAOLIO 20x30x7 PTFE | OIL SEAL 20 x 30 x 7 PTFE |
| 24 | 18267 | 1 | | CONTRALBERO 2T 250/300 ES MY 2019 | BALANCE SHAFT |
| 25 | F08459 | 1 | | SENSORE POSIZIONE CAMBIO eM060 CPL G.ANTIORARIO | |
| 26 | 49713 | 2 | | GRANO 6X20 SENSORE CAMBIO 2T 250/300 | GRUB SCREW |
| 27 | 49487 | 3 | | VITE TCEI 6X35 UNI 5931 | BOLT TCEI 6X35 |

| Pos. | Codice | Q.tà | Note | Descrizione | Description |
|---|---|---|---|---|---|
| 28 | 49490 | 11 | | VITE TCEI 6X50 UNI 5931 | BOLT TCEI 6X50 |

# FORCHETTE CAMBIO 5M



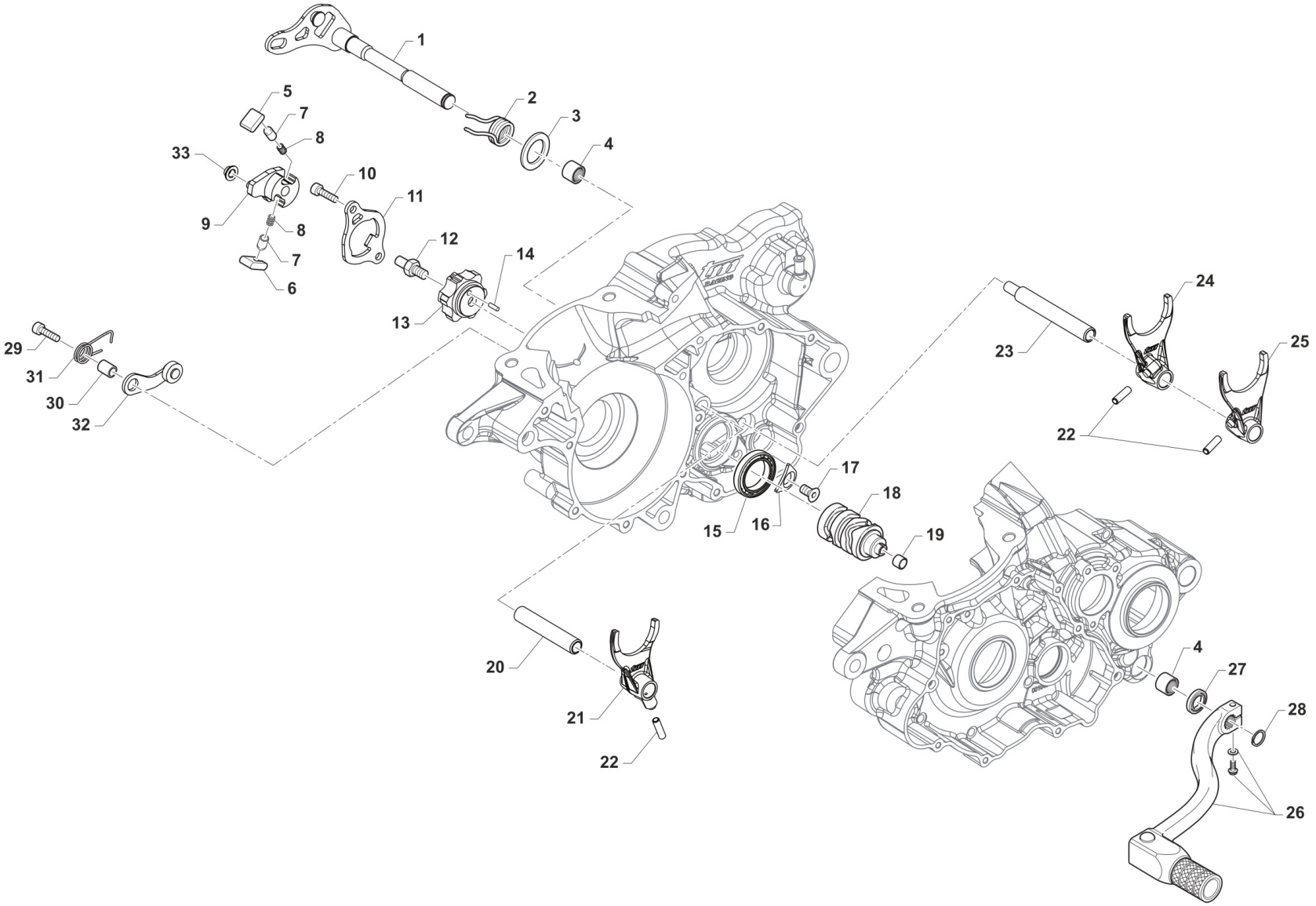


TM 0710

# FORCHETTE CAMBIO 5M



| Pos. | Codice | Q.tà | Note | Descrizione | Description |
|---|---|---|---|---|---|
| 1 | 28105 | 1 | | ALBERO COMANDO CAMBIO 250/300 IE CPL | SHAFT, GEARSHIFT 250/300 IE CPL |
| 2 | 16065 | 1 | | MOLLA RITORNO LEVA CAMBIO 250 2T IE | SPRING, RETURN GEAR LEVER 250 2S EI |
| 3 | 49073 | 1 | | RONDELLA 12,1X22X1 | WASHER 12,1X22X1 125 MF1/2 |
| 4 | 19060 | 2 | | ASTUCCIO A RULLI HK 1212 | NEEDLE CAGE HK 1212 |
| 5 | F26587 | 1 | | CRICCHETTO SX 2T 250/300 ES | RATCHET, LF GEAR (HT) 250 M3 |
| 6 | F26588 | 1 | | CRICCHETTO DX 2T 250/300 ES | RATCHET, RH GEAR (HT) 250 M3 |
| 7 | F26592 | 2 | | PUNTALE CRICCHETTO 2T 250/300 ES | PIN, RATCHET GEAR (HT) |
| 8 | F16469 | 2 | | MOLLA PER PUNTALE 2T 250/300 ES | SPRING, GEARBOX PIN EDM |
| 9 | F26620 | 1 | | PORTACRICCHETTI HT 2T 250/300 ES | GEAR |
| 10 | 49482 | 2 | | VITE TCEI 6X14 UNI 5931 | BOLT TCEI 6X14 |
| 11 | 26160 | 1 | | PIASTRINO RIENTRO CRIC.250 M18 | PLATE |
| 12 | F49873 | 1 | | PERNO FILETTATO PORTACRICCHETTI (HT) 2T 250/300 ES | THREADED PIN FOR RATCHET HOLDER (HT) |
| 13 | 26179 | 1 | | TESTA ALBERO DESMO ROT.D12 250/300 2T M22 | |
| 14 | F19504 | 1 | | RULLO D.4 X 8 | PIN D.4 X 8 |
| 15 | F03381 | 1 | | CUSCINETTO 61805 | BEARING 61805 |
| 16 | F48352 | 1 | | PIASTRINO FISSA CUSCINETTO D72 | PLATE |
| 17 | 49403 | 1 | | VITE TSEI 6X12 ZINCATO | SCREW TSEI 6x12 |
| 18 | 33253 | 1 | | ALBERO DESM. 250/300 5M INT. MY19 CPL | |
| 19 | 26260 | 1 | | BOCCOLA ALB. DESMODROMICO 250/300 2T I.E. | BUSH |
| 20 | 33260 | 1 | | PERNO FORCHETTA AP 250/300 MY19 | PIN, MAINSHAFT FORK |
| 21 | 33018 | 1 | | FORCHETTA ALB.PRIM.250/300 M18 4A E 5A | FORK, MAINSHAFT |
| 22 | F19533 | 3 | | RULLO D.6 X 15 | PIN |
| 23 | 33025 | 1 | | PERNO FORCHETTA AS 250/300 ES + 125 ES | PIN, COUNTERSHAFT FORKS |
| 24 | 33023 | 1 | | FORCHETTA A.S.1^3^ 250/300 M18 1A E 3A | FORK 1, COUNTERSHAFT |
| 25 | 33024 | 1 | | FORCHETTA A.S.2^ 250/300 M18 2A | FORK 2, COUNTERSHAFT |
| 26 | 43049 | 1 | | LEVA CAMBIO 2T (485) | GEAR LEVER 2S [485] |
| 27 | 04038 | 1 | | PARAOLIO 12x20x5 2T 250/300 LEVA CAMBIO | OIL SEAL GEAR LEVEL 250/300 2S Fi 12x20x5 |
| 28 | 49212 | 1 | | SEEGER E12 LEVA CAMBIO | CIRCLIP D.12 - EXTERNAL |

# FORCHETTE CAMBIO 5M



| Pos. | Codice | Q.tà | Note | Descrizione | Description |
|---|---|---|---|---|---|
| 29 | 49485 | 1 | | VITE TCEI 6X25 UNI 5931 | BOLT TCEI 6x25 |
| 30 | 26007 | 1 | | DISTANZIALE MOLLA BLOCCAMARCE | SPACER, STOP GEAR SPRING |
| 31 | F16447.3 | 1 | | MOLLA BLOCCA MARCE 250 4T D.FILO 2.4 | |
| 32 | 26095 | 1 | | PIASTRINO BLOCCAMARCE KV/95CPL + MOTO | PLATE, STOP GEAR KV/95 ASSY |
| 33 | F26593 | 1 | | BOCCOLA FLANGIATA PORTACRICCHETTO F26620 | LEVER BUSH |

# CAMBIO 5M MX (OPEN CLUTCH F3)
# GEARBOX 5S (OPEN CLUTCH F3)



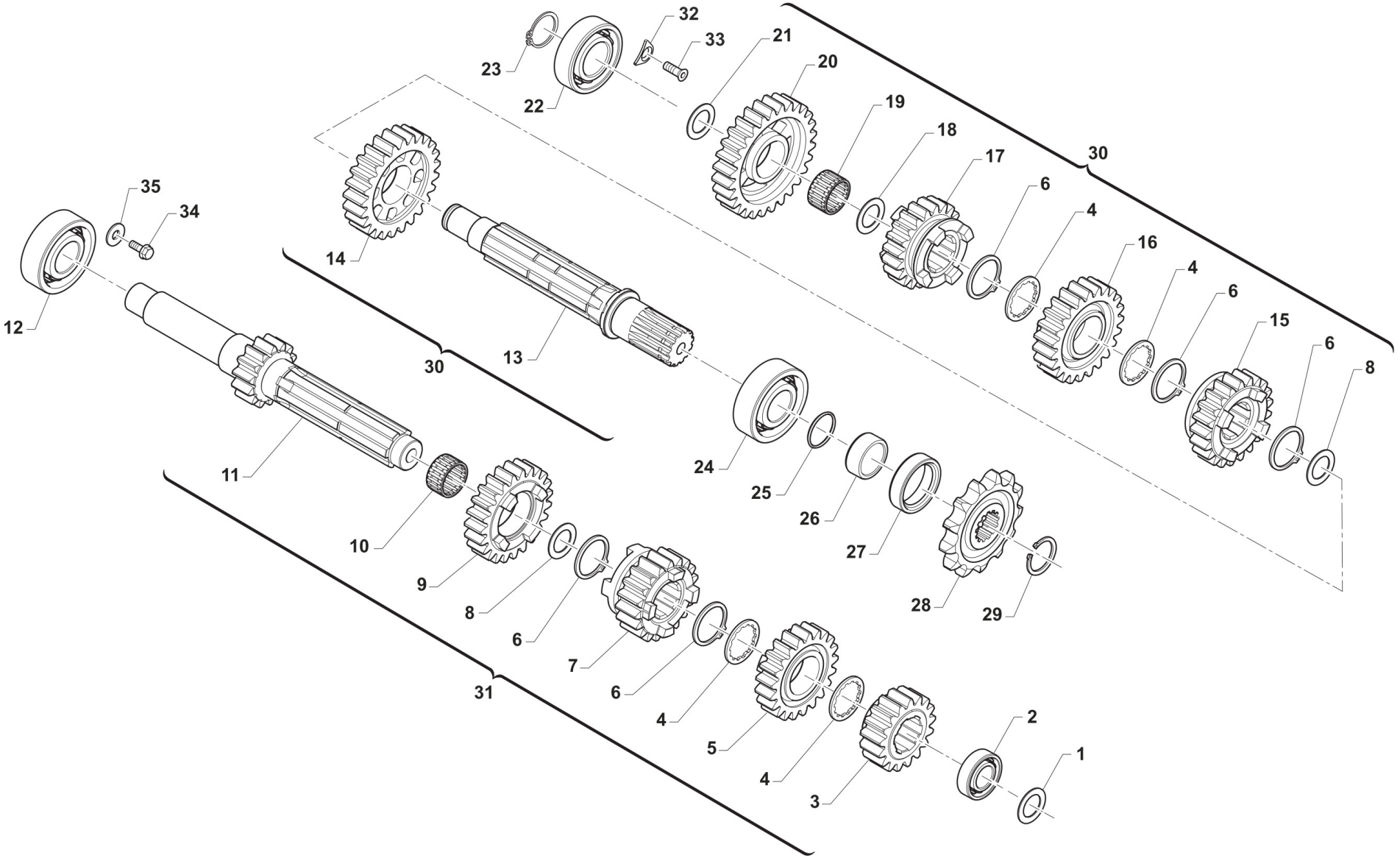


TM 0132.05

| Pos. | Codice | Q.tà | Note | Descrizione | Description |
|---|---|---|---|---|---|
| 1 | F48401.30 | 1 | | RASAMENTO Ø20,3 x Ø35,9 x 0,30 | SHIM |
| 2 | F03379 | 1 | | CUSCINETTO 16004 C3 | BUSH 16004 C3 |
| 3 | 40255 | 1 | | INGRAN A.P. 2a Z 17 250 CR/E | GEAR, 2ND (17T) MAINSHAFT MX/E |
| 4 | 48251 | 4 | | SPESSORE DENT.CAMBIO 250/KZ10B | SPACER, GEAR 250cc |
| 5 | 40260 | 1 | | INGRAN A.P. 4a Z 21 250 CR/E | GEAR, 4TH (21T) MAINSHAFT MX/E |
| 6 | 49255 | 5 | | SEEGER RETTIFICATO CAMBIO 250 | CIRCLIP, GEAR BOX 250cc |
| 7 | 40258 | 1 | | INGRAN A.P. 3a Z 19 250 CR/E | GEAR, 3RD (19T) MAINSHAFT MX/E |
| 8 | 48254 | 2 | | SPES.RE CAMBIO 25.2X31.8X1 250 | SPACER,GEAR BOX250 25.2X31.8X1 |
| 9 | 40262 | 1 | | INGRAN A.P. 5a Z 23 250/CROSS | GEAR, 5TH (23T) MAINSHAFT MX |
| 10 | 19051 | 1 | | GABBIA ING. V AP. 250 | NEEDLE CAGE K 25x29x10 AP250 |
| 11 | 40333 | 1 | | ALBERO PRIMARIO CR Z15/250 M18 (F3BX) | |
| 12 | 03252 | 1 | | CUSCINETTO 6205 C4 | BUSH, MAINSHAFT 250 / KZ |
| 13 | 40271 | 1 | | ALBERO SECONDARIO 250 M.2018 | COUNTERSHAFT |
| 14 | 40275 | 1 | | INGRAN A.S. 2a Z 25 250 CR/E | GEAR, 2ND(25T)COUNTER.MX/E 250 |
| 15 | 40279 | 1 | | INGRAN A.S. 4a Z 21 250 CR/E | GEAR, 4TH(21T)COUNTER.MX/E 250 |
| 16 | 40277 | 1 | | INGRAN A.S. 3a Z 23 250 CR/E | GEAR, 3RD(23T)COUNTER.MX/E 250 |
| 17 | 40281 | 1 | | INGRAN A.S. 5a Z 20 250/CROSS | GEAR, 5TH(20T)COUNTERSH.MX 250 |
| 18 | 48252 | 1 | | SPESSORE CAMBIO 20X29X1 250 | SPACER, GEAR 250 20X29X1 |
| 19 | 19012 | 1 | | GABBIA A RULLI K 20X24X10 | BUSH NEEDLE CAGE 20 X 24 X 10 |
| 20 | 40272 | 1 | | INGRAN A.S. 1a Z 27 250/CROSS | GEAR, 1ST(27T)COUNTERSH.MX 250 |
| 21 | 48059 | 1 | | Spessore alb.sec. 2T IE 17x28x3.5 | SPACER |
| 22 | 03251 | 1 | | CUSCINETTO 6203/C3 A/P A/S 250 | BUSH, MAINSHAFT COUNTER.250/4T |
| 23 | F49876 | 1 | | SEEGER E 17 X 1,5 CAMBIO 250/300 2T 19-> | CIRCLIP E 17 GEAR BOX 250/300 2S MY.19-> |
| 24 | 03020 | 1 | | CUSCINETTO RULLI NJ205ET2XC3 (BANCO 85/100 M.18) | BUSH CRANKSHAFT 85/100->18 NJ205ET2XC3 |
| 25 | 12252 | 1 | | O RING PIGNONE CAT.+DIS.AL.MOT | O-RING, 25,12 x 1,78 |
| 26 | 26261 | 1 | | DISTANZIALE PIGNONE CAT.250/300 2T 19 | SPACER SPROCKET DRIVE 250/300 T.S. MY19-> |
| 27 | 04101 | 1 | | PARAOLIO PIGNONE CATENA 250 | OIL SEAL 40 x 30 x 7 |
| 28 | F40925 | 1 | | PIGNONE CATENA Z14 O/S 2MM | SPROCKET 14T, DRIVE 4S O/S 2mm |

| Pos. | Codice | Q.tà | Note | Descrizione | Description |
|---|---|---|---|---|---|
| 29 | 49252 | 1 | | SEEGER PIGNONE CATENA 250 E 25 | CIRCLIP D.25 FRONT SPROKET 250 |
| 30 | 40295 | 1 | | ALBERO SECONDARIO MX CPL 250/300 2T ES MY 2019 | COUNTERSHAFT 250/300 2S MX ES ASSY |
| 31 | 40339 | 1 | | ALBERO PRIM. 2T 250/300 MX 5M CPL (OPEN CLUTCH F3) | |
| 32 | F48352 | 1 | | PIASTRINO FISSA CUSCINETTO D72 | PLATE |
| 33 | 49403 | 1 | | VITE TSEI 6X12 ZINCATO | SCREW TSEI 6x12 |
| 34 | 49962 | 1 | | VITE TCEI 6X12 BASSA / F.GUIDA | BOLT |
| 35 | 49603 | 1 | | RONDELLA M 6,4 X 12 X 1,6 | WASHER 6x12 |

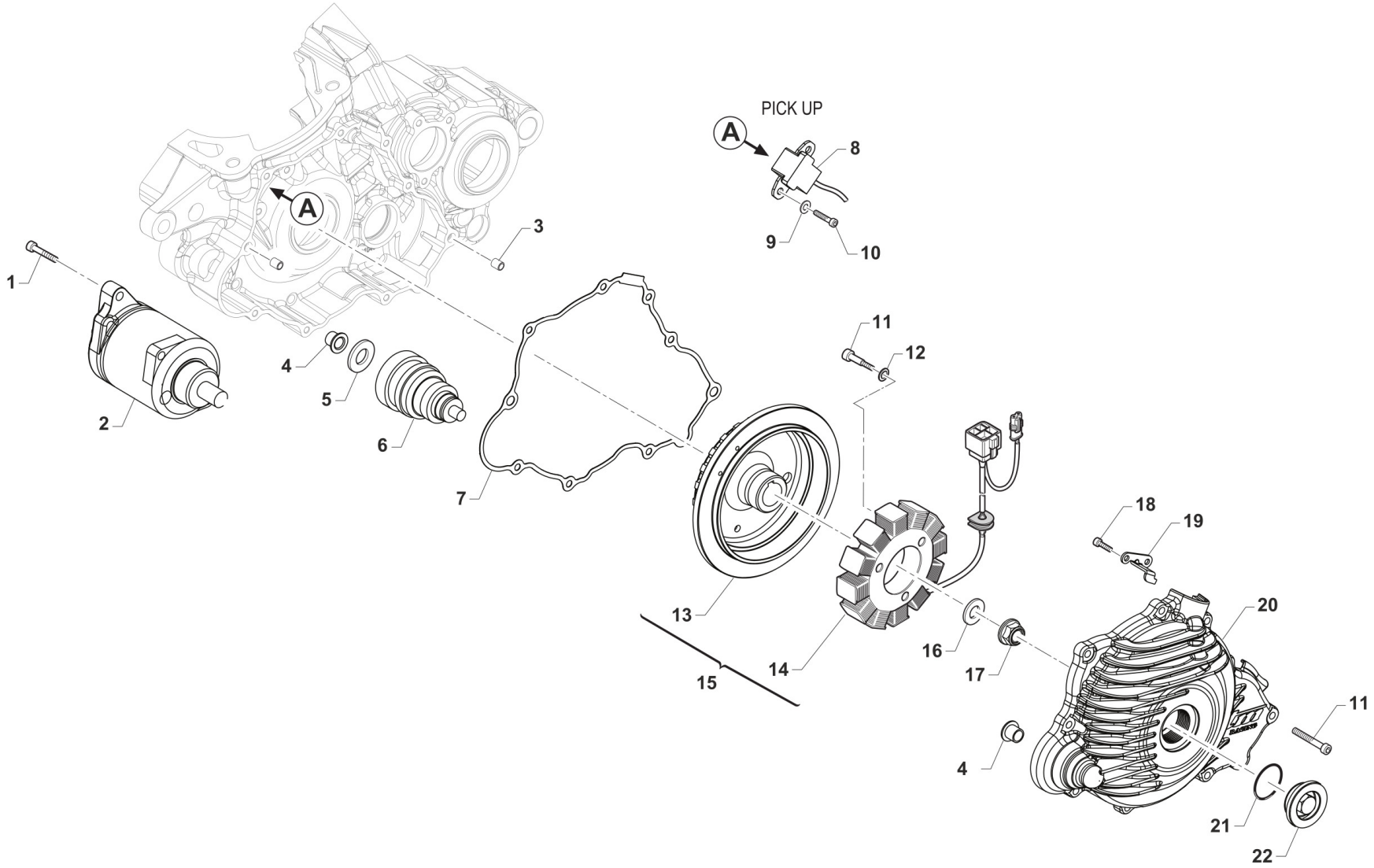


TM 0201

| Pos. | Codice | Q.tà | Note | Descrizione | Description |
|---|---|---|---|---|---|
| 1 | 49485 | 2 | | VITE TCEI 6X25 UNI 5931 | BOLT TCEI 6x25 |
| 2 | 68206 | 1 | | MOTORINO AVVIAMENTO 250/300 M18-> | STARTER MOTOR 250/300 T.S. MY19-> |
| 3 | 26041 | 2 | | GRANO CENTRAGGIO D.7X8 F.5,2 | DOWEL PIN 7 x 8 Hole 5,2 |
| 4 | 26256 | 2 | | BOCCOLA FLANGIATA BENDIX AVV. EL. 250/300 2T I.E. | FLANGE BUSH BENDIX EL.ST. 250/300 T.S. Fi |
| 5 | 72418.23 | 1 | | LAMELLA D.8 23-020 | |
| 6 | 68207 | 1 | | BENDIX MOTORE 250/300 2T ES MY 2019 | BENDIX |
| 7 | 05260 | 1 | | GUARN. COP. ACC. 250/300 2T ES M19-> | GASKET, IGNITION COVER 250/300 2S ES MY 19 |
| 8 | F15478 | 1 | | PICK-UP KOKUSAN | PICK-UP KOK PU5157 |
| 9 | 49601 | 2 | | RONDELLA 5X11 | WASHER 5x11 |
| 10 | 49472 | 2 | | VITE TCEI 5X12 UNI 5931-912 Brun | BOLT TCEI 5X12 |
| 11 | 49477 | 12 | | VITE TCEI 5X25 UNI 5931-912 | BOLT TCEI 5X25 |
| 12 | 49615 | 3 | | RONDELLA ACCIAIO 5x11x0,5 | WASHER STEEL 5 mm |
| 13 | 15247 | 1 | | ROTORE X GEN. ES 250/300 2T IE CPL M.19-> in C45 | ROTOR, INGNITION 250/300 2T ES MY 2019 |
| 13 | F50816 | 1 | | ESTRATTORE ROTORE D. 28 x 1,25 125Fi + 250/300 2T ES 19-> | PULLER, ROTOR D. 28 x 1,25 |
| 14 | F15551 | 1 | | STATORE KOK YS 9022 | STATOR KOKUSAN YS 9022 |
| 15 | 15255 | 1 | | ACCENSIONE CPL 250/300 2T ES MY 201915247 + F15551 | IGNITION ASSY 250/300 T.S. ES MY 19-> |
| 16 | 49613 | 1 | | RONDELLA ACCIAIO 12 | STEEL WASHER 12 |
| 17 | 49056 | 1 | | DADO ACCENSIONE MX/E 12 x 1.25 | NUT, IGNITION 100cc |
| 18 | 49580 | 2 | | VITE TCEI 4X10 5931-912 | BOLT |
| 19 | F30945 | 1 | | PROTEZIONE CAVI ACC.NE 250N | PROTECTION IGNITION WIRES 250N |
| 20 | 30278 | 1 | | COPERCHIO ACCENSIONE 250/300 2T ES MY 19 | IGNITION COVER 250/300 2S E.S. MY19-> |
| 20 | 30397 | 1 | | COPERCHIO ACCENSIONE 2T 250/300 ES MY19 - CNC TM CORSE | IGNITION COVER CNC 2S 250/300 ES - TM CORSE |
| 21 | F12322 | 1 | | O RING 2106 | O-RING |
| 22 | 49290 | 1 | | TAPPO COPERCHIO ACC. 250/300 2T MY 2019(PUO' SOSTITUIRE F49833) | CAP IGNITION COVER 250/300 2S MY19 |

# KIT AVVIAMENTO A PEDALE
# KICK START KIT



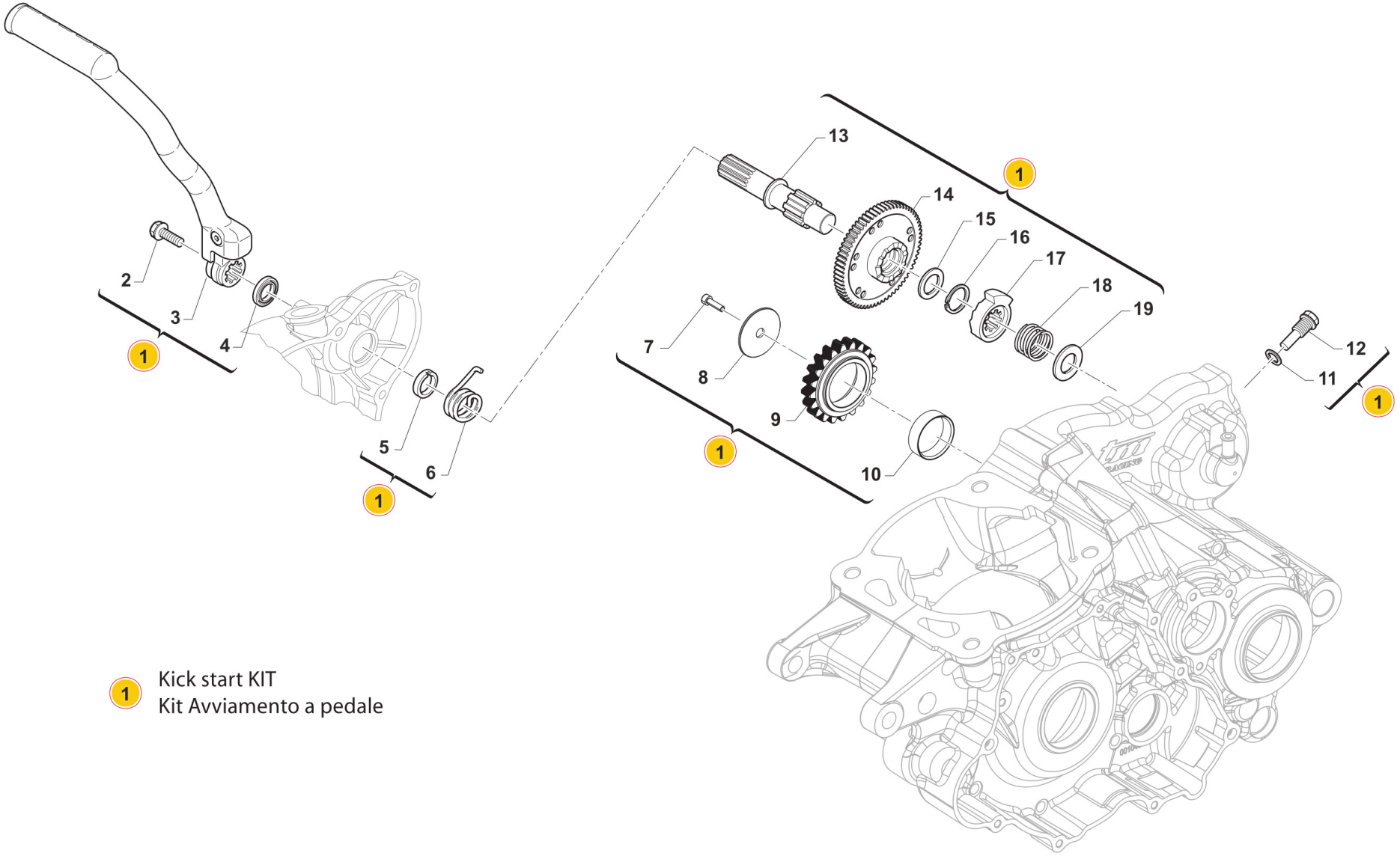


1 Kick start KIT
Kit Avviamento a pedale

TM 0711

# KIT AVVIAMENTO A PEDALE
# KICK START KIT



| Pos. | Codice | Q.tà | Note | Descrizione | Description |
|---|---|---|---|---|---|
| 1 | 43251 | 1 | | KIT M/M 2T 250/300 ES MY 2019/-> | KIT KICK STARTER SYSTEM 2S 250/300 ES MY 2019/-> |
| 2 | 49369 | 1 | | VITE TE F/R 8X10 Ch.10 M/M | BOLT 8X10 T.10mm(Kich Starter) |
| 3 | 43250.19 | 1 | | LEVA M/M 250/300 2T ES MY 2019 | LEVER, KICK STARTER |
| 4 | F04365 | 1 | | PARAOLIO LEVA M/M 250/09 | OIL SEAL 18x28x6,5 KS LEVER |
| 5 | F26423 | 1 | | BOCCOLA MOLLA M/M. 250Fi | BUSH |
| 6 | F16428 | 1 | | MOLLA RICHIAMO AVVIAMENTO A P. | SPRING, KICK STARTER RETURN 4S |
| 7 | 49586 | 1 | | VITE TCEI 6X14U TESTA RIDOTTA | |
| 8 | 49981 | 1 | | RONDELLA 6x31x1.5 x ING.FOLLE RINF. 250/300 2T 2019 | WASHER |
| 9 | 40362 | 1 | | INGRANAGGIO FOLLE M/M RINF. 250/300 | GEAR |
| 10 | 26262 | 1 | | BRONZINA ING. FOLLE M/M RINF. 250/300 2T | BUSH |
| 11 | F49939 | 1 | | RONDELLA RAME 8 X13 X 1,5 | WASHER COPPER 8,5X13X1,5 |
| 12 | 49987 | 1 | | VITE DISIMP.CRICCH.M/M.250/300 2T ES MY 2019 | BOLT |
| 13 | F28657 | 1 | | ALBERO M/M 250Fi | SHAFT, KICK STARTER |
| 14 | 40346 | 1 | | INGR. CONDUTTORE M/M 250/300 | GEAR |
| 15 | F48355 | 1 | | SPESSORE TT 18 X 23 X 0,5 | SHIM 18 X 23 X 0,5 |
| 16 | F49835 | 1 | | SEEGER AV 18 | SEEGER |
| 17 | F26424 | 1 | | BUSSOLA A CRICC.X K.S. 250N | K.STARTER STOPPER CAM 250 4S |
| 18 | F16429 | 1 | | MOLLA CRICCHETTO AVV.A PEDALE | SPRING |
| 19 | F48354 | 1 | | SPESSORE TT 14 X 30 X 0,5 | SPACER |