2T112MXJ27-T

2T 112 MX-J

2S 112 MX-J

13/10/2026

TM MOTO SRL UNIPERSONALE - VIA FANO, 6 - 61122 PESARO – ITALY

WWW.TM-MOTO.IT

SOMMARIO
TABLE OF CONTENTS

MANUBRIO - HANDLEBAR 3
FRENO ANTERIORE - FRONT BRAKE 5
RUOTA ANT 17 X 1.40 - FRONT WHEEL 17 X 1.40 CORSE 7
RUOTA ANT 19 X 1.40 - FRONT WHEEL 19 X 1.40 CORSE 9
FORCELLA FORMULA - FRONT FORK FORMULA 11
IMPIANTO RAFFREDDAMENTO - RADIATOR 14
SERBATOIO - FUEL TANK 16
TELAIO - FRAME 18
PLASTICHE E SELLE - PLASTICS AND SEAT MOTO 21
FILTRO ARIA - AIR FILTER 23
FORCELLONE - SWINGARM 25
LEVERAGGI - LINKAGE 27
RUOTA POST 14 X 1.60 - REAR WHEEL 14 X 1.60 29
RUOTA POST 16 X 1.85 - REAR WHEEL 16 X 1.85 32
FRENO POSTERIORE - REAR BRAKE 35
SCARICO - EXHAUST SYSTEM 38
KIT ADESIVI - DECALS KIT 40

MANUBRIO
HANDLEBAR

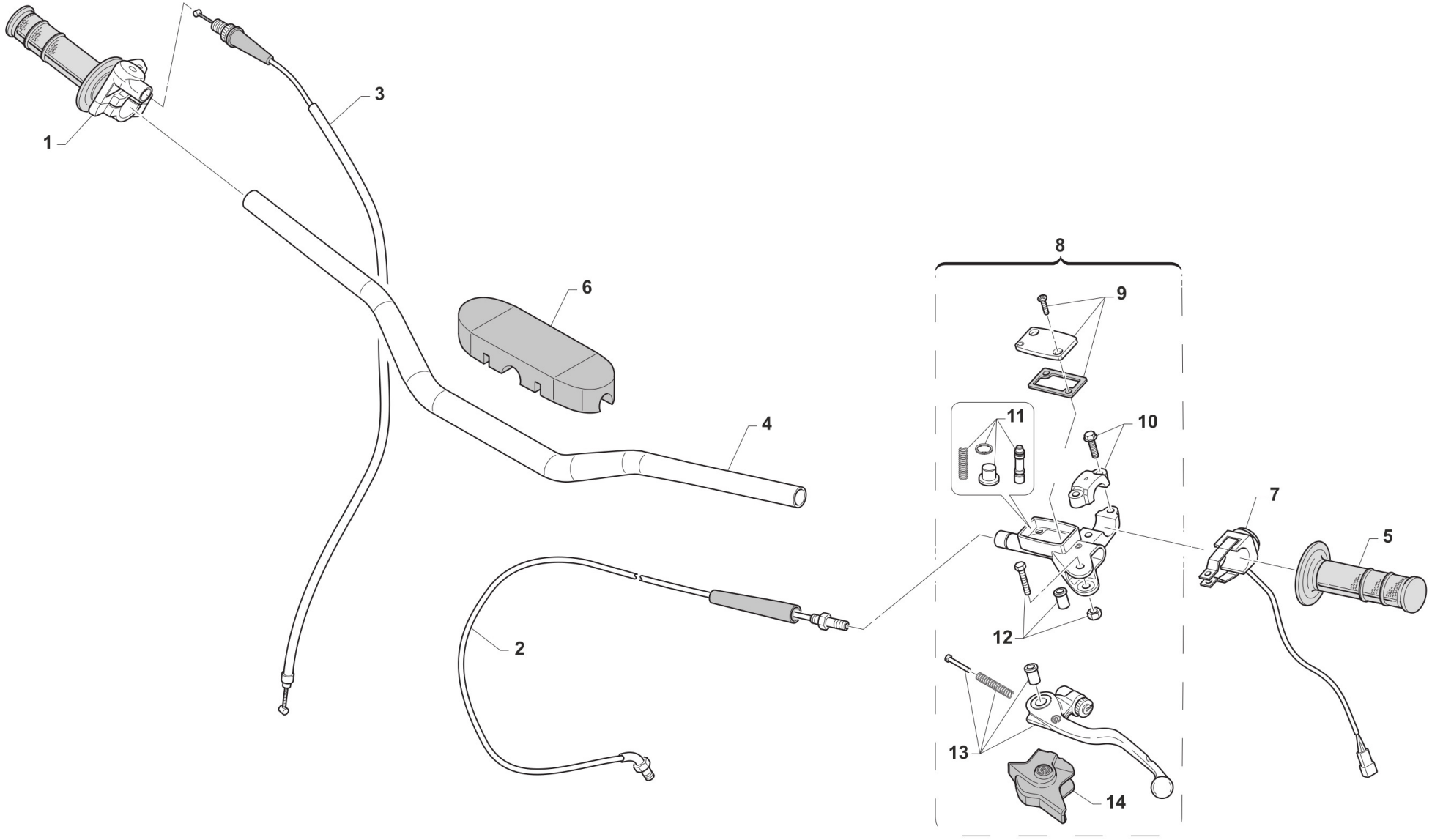

MANUBRIO
HANDLEBAR

Pos.	Codice	Q.tà	Note	Descrizione	Description
1	64017	1		COMANDO GAS DOMINO MOD. 99->	THROTTLE CONTROL DOMINO 2S 99/->
2	35270.13	1		TUBO FRIZ. IDR. 85J M.13/-> WH	HYDR.CLUTCH HOSE 85J M.13->
3	64040	1		CAVO GAS JUNIOR M.13->	THROTTLE CABLE JUNIOR 13
4	64086	1		MANUBRIO TECLIN 85J + MB M.13/->	
5	64087	1		MANOPOLE COPPIA CIRCUIT IV (AZZURRO)	
6	64078.1	1		PARACOLPI MANUBRIO TM 2013 NR	PROTECTION FOR HANDLEBAR TM BLACK
7	68068	1		PULSANTE DI MASSA 85cc J13	SWITCH, ENGINE STOP 85cc 13/->
8	69360	1		POMPA FRIZIONE PS 9/17.7 BREMBO	PUMP, CLUTCH PS 9/17.7 BREMBO
9	64266	1		COPERCH./MEMBRAN.P.FRIZ.BREMBO 69360	
10	69362	1		CAVALLOTTO POMPA FRENO ANT PS10/16	HOLDER
11	64265	1		FLOTTANTE POMPA FRIZ. BREMBO 69360 9/17	
12	64245	1		PERNO LEVA POMPA FRIZ. BREMBO	PIN
13	64241	1		LEVA FRIZIONE BREMBO RICAMBIO	LEVER, CLUTCH BREMBO
14	64238	1		PARAPOLVERE POMPA FRIZIONE BR.	DUST SEAL,CLUTCH MASTER CYL.BR

FRENO ANTERIORE
FRONT BRAKE

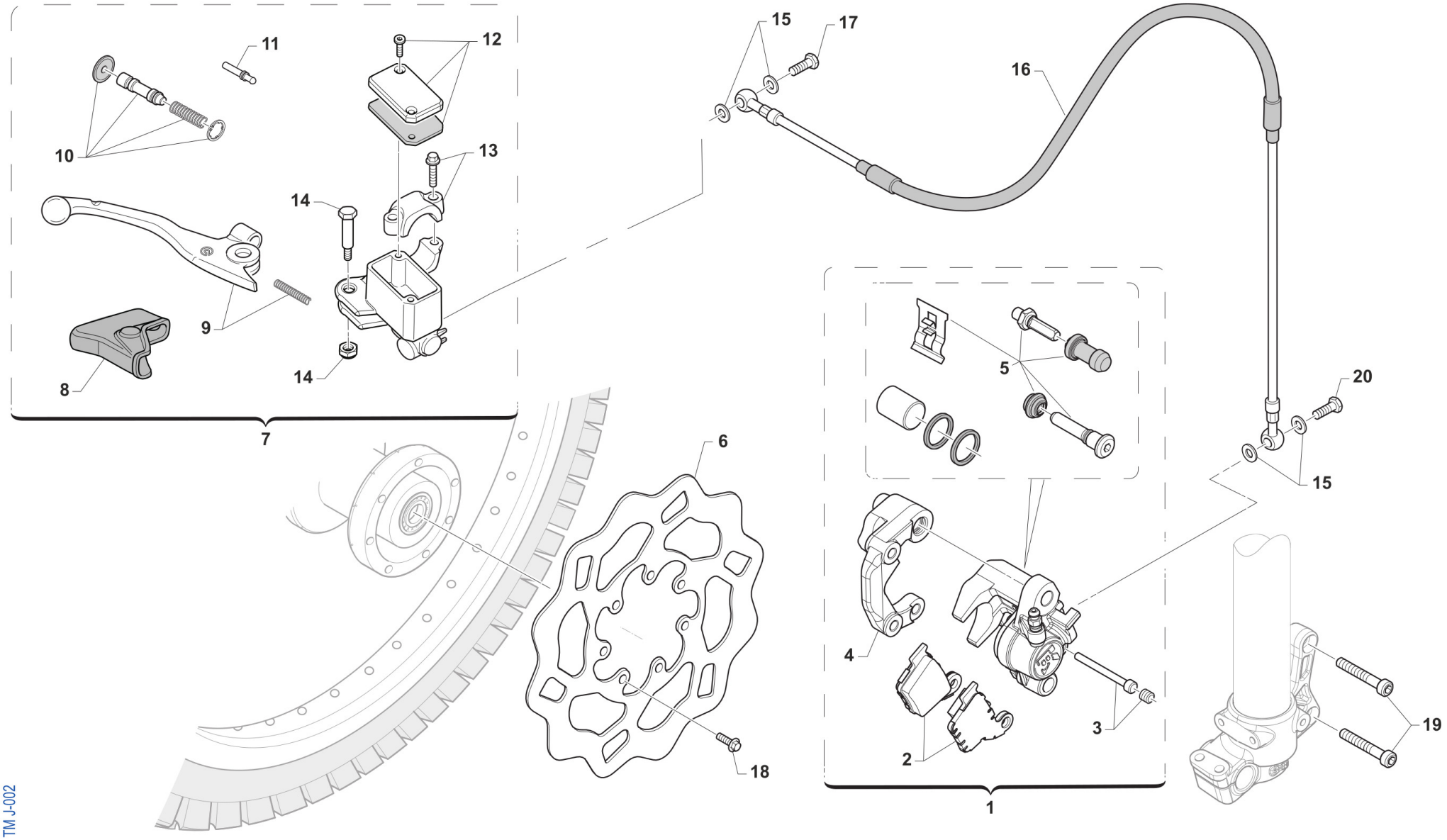

FRENO ANTERIORE
FRONT BRAKE

Pos.	Codice	Q.tà	Note	Descrizione	Description
1	69236	1		PINZA FRENO ANTERIORE J M13->	BRAKE CALIPER, FRONT JUNIOR
2	69247	1		PASTIGLIE ANT. / POST. JUNIOR M.13->	PAD KIT, F.&R. CALIPER J 13
3	69280	1		PERNO + GRANO PAST. ANT/POST BRAKING JUNIOR	PIN+GRUB ANT/POST BRAKING JUNIOR
4	69343	1		SUPPORTO PINZA ANT BRAKING J13	HOLDER, FRONT BRAKE CALIPER
5	69254	1		KIT VITI + CUFFIE + LAMIERINO PINZA ANT/POST BRAKING JUNIOR	BOLT+RETAINER BRAKE PAD ANT/POST JUNIOR
6	69306	1		DISCO FRENO 220X3 ANT J '17 MM	BRAKE DISK, FRONT 220x3 JUNIOR
7	69248	1		POMPA FRENO ANT PS10/16 BREMBO	FRONT MASTER CYLINDER PS 10/16 BREMBO
8	69363	1		CAPPUCCIO POMPA FRENO ANT PS10/16	RUBBER FRONT MASTER CYLINDER BREMBO
9	69357	1		LEVA FRENO ANT BR. X 69248	BRAKE FRONT LEVER BREMBO X 69248
10	69358	1		KIT FLOTTANTE POMPA FREN.69248	CYLINDER AND RUBBER KIT 69248
11	69364	1		PUNTALINO POMPA FRENO ANT PS10/16	PUSH ROD
12	69368	1		TAPPO POMPA FRENO BREMBO 69248	CAP
13	69362	1		CAVALLOTTO POMPA FRENO ANT PS10/16	HOLDER
14	69365	1		PERNO LEVA POMPA FRENO ANT PS10/16	PIN, LEVER
15	69034	4		RONDELLA X BULLONE FREN B22001	WASHER B22001, BRAKE HOSE
16	69246	1		TUBO FRENO ANT 85J + MB M. 13/->	HOSE, FRONT BRAKE 85J M. 13->
17	69093	1		BULLONE 10X1 TUBO FRENO BREMBO 03	HOLLOW SCREW M10X1 BREMBO BR.
18	49370	7		VITE TE F/R 6X12	BOLT 6X12
19	49501	2		VITE TCEI 8X25 UNI 5931	BOLT TCEI 8X25
20	69094	1		BULLONE 10X1.25 T.FRENO NISSIN 03	BOLT,10X1,25 BRAKE HOSE NISSIN

RUOTA ANT 17 X 1.40
FRONT WHEEL 17 X 1.40 CORSE

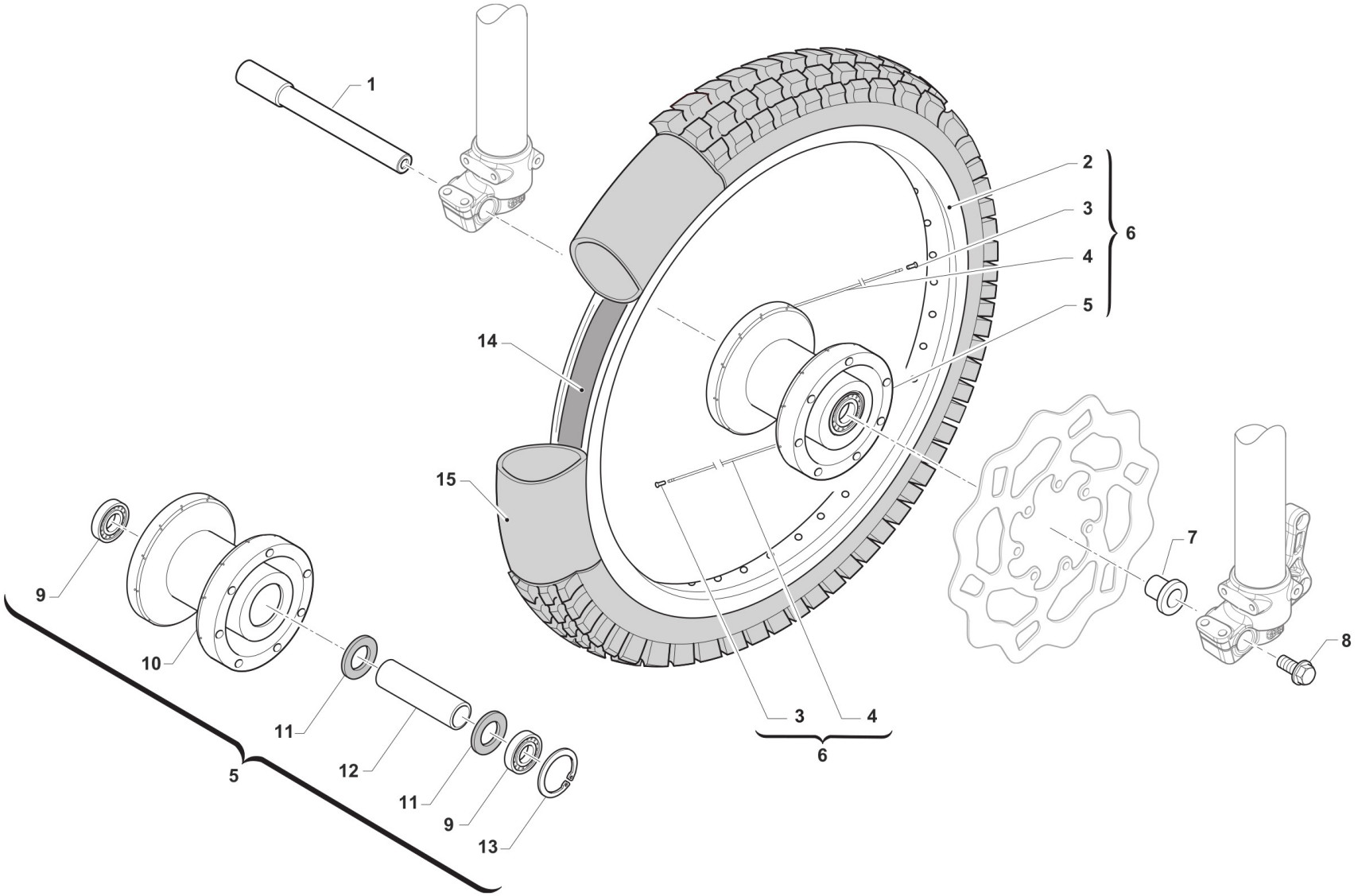

RUOTA ANT 17 X 1.40
FRONT WHEEL 17 X 1.40 CORSE

Pos.	Codice	Q.tà	Note	Descrizione	Description
1	74058	1	FORMULA FORK	PERNO RUOTA ANT 85j MY13 20-17X209 FORC. FORMULA	AXLE, FR WHEEL 85J M.13
2	70042	1		CERCHIO ANT 17x1.40 JUNIOR TK	FRONT RIM 17 JUNIOR Tagasago
3	70063	28		NIPPLO ACCIAIO 3,5	NIPPLE 3,5 mm
4	70067	28		RAGGIO RUOTA 17 189X3,5 80 J	SPOKE 85J - 17 189x3,5
5	70221	1		MOZZO ANT 80/85J 13/-> CPL	FRONT HUB ASSY, JUNIOR
6	70234	1		CERCHIO ANT CPL 85J 17 13/->	RIM FRONT ASSY 85J 17 M.13->
7	26144	1		BOCCOLA CUSC.R.ANT.J13 15 F.17	BUSH, FRONT WHEEL BEA.J 15 H17
8	49084	1		DADO PERNO R.ANT 85 J M. 13/->	NUT, AXLE FRONT WHEEL 85J 13->
9	03062	2		CUSCINETTO RUOTA ANT 6003 85J	BUSH, FRONT WHEEL BRAKE SIDE
10	70320	1		MOZZO ANT 85J NUDO VMX MY2022	
11	12062	2		O RING DISTANZIALE RUOTA JUNIOR M.13->	O-RING SPACER WHEEL JUNIOR MY 13->
12	70231	1		DIST.INTERNO RUOTA ANT. JUNIOR M.13->	INNER SPACER FRONT WHEEL J. M.13->
13	49261	1		SEEGER MOZZO FORC.45/50/BS I35	SEEGER, FRONT WHEEL HUB I35
14	70034	1		FLAP RUOTA ANTERIORE 17 JUNIOR	FLAP FRONT WHEEL 17
15	80123	1		CAMERA ARIA 17 J	INNER TUBE REAR WHEEL 17 J

RUOTA ANT 19 X 1.40
FRONT WHEEL 19 X 1.40 CORSE

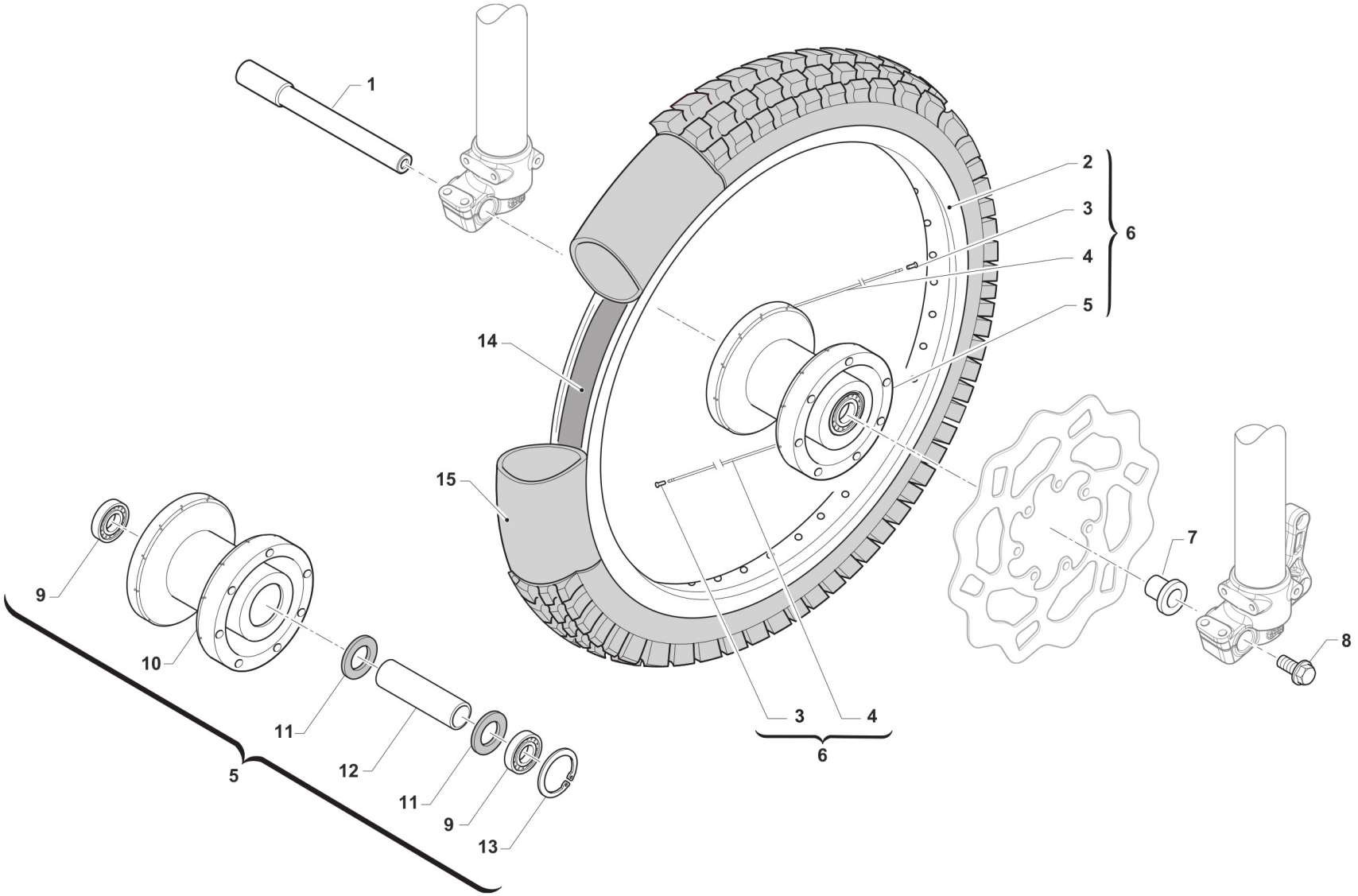

RUOTA ANT 19 X 1.40
FRONT WHEEL 19 X 1.40 CORSE

Pos.	Codice	Q.tà	Note	Descrizione	Description
1	74058	1	FORMULA FORK	PERNO RUOTA ANT 85j MY13 20-17X209 FORC. FORMULA	AXLE, FR WHEEL 85J M.13
2	70040	1		CERCHIO ANT 19x1.40 JUNIOR TK	FRONT RIM 19x1.40 JUN.Tagasago
3	70063	28		NIPPLO ACCIAIO 3,5	NIPPLE 3,5 mm
4	70069	28		RAGGIO RUOTA 19 214X3,5 80 J	SPOKE, FRONT WHEEL 214x3,5 85j
5	70221	1		MOZZO ANT 80/85J 13/-> CPL	FRONT HUB ASSY, JUNIOR
6	70236	1		CERCHIO ANT CPL 85J 19 13/->	WHEEL, FRONT ASSY 85J 19 13->
7	26144	1		BOCCOLA CUSC.R.ANT.J13 15 F.17	BUSH, FRONT WHEEL BEA.J 15 H17
8	49084	1		DADO PERNO R.ANT 85 J M. 13/->	NUT, AXLE FRONT WHEEL 85J 13->
9	03062	2		CUSCINETTO RUOTA ANT 6003 85J	BUSH, FRONT WHEEL BRAKE SIDE
10	70320	1		MOZZO ANT 85J NUDO VMX MY2022	
11	12062	2		O RING DISTANZIALE RUOTA JUNIOR M.13->	O-RING SPACER WHEEL JUNIOR MY 13->
12	70231	1		DIST.INTERNO RUOTA ANT. JUNIOR M.13->	INNER SPACER FRONT WHEEL J. M.13->
13	49261	1		SEEGER MOZZO FORC.45/50/BS I35	SEEGER, FRONT WHEEL HUB I35
14	70034	1		FLAP RUOTA ANTERIORE 17 JUNIOR	FLAP FRONT WHEEL 17
15	80123	1		CAMERA ARIA 17 J	INNER TUBE REAR WHEEL 17 J

FORCELLA FORMULA
FRONT FORK FORMULA

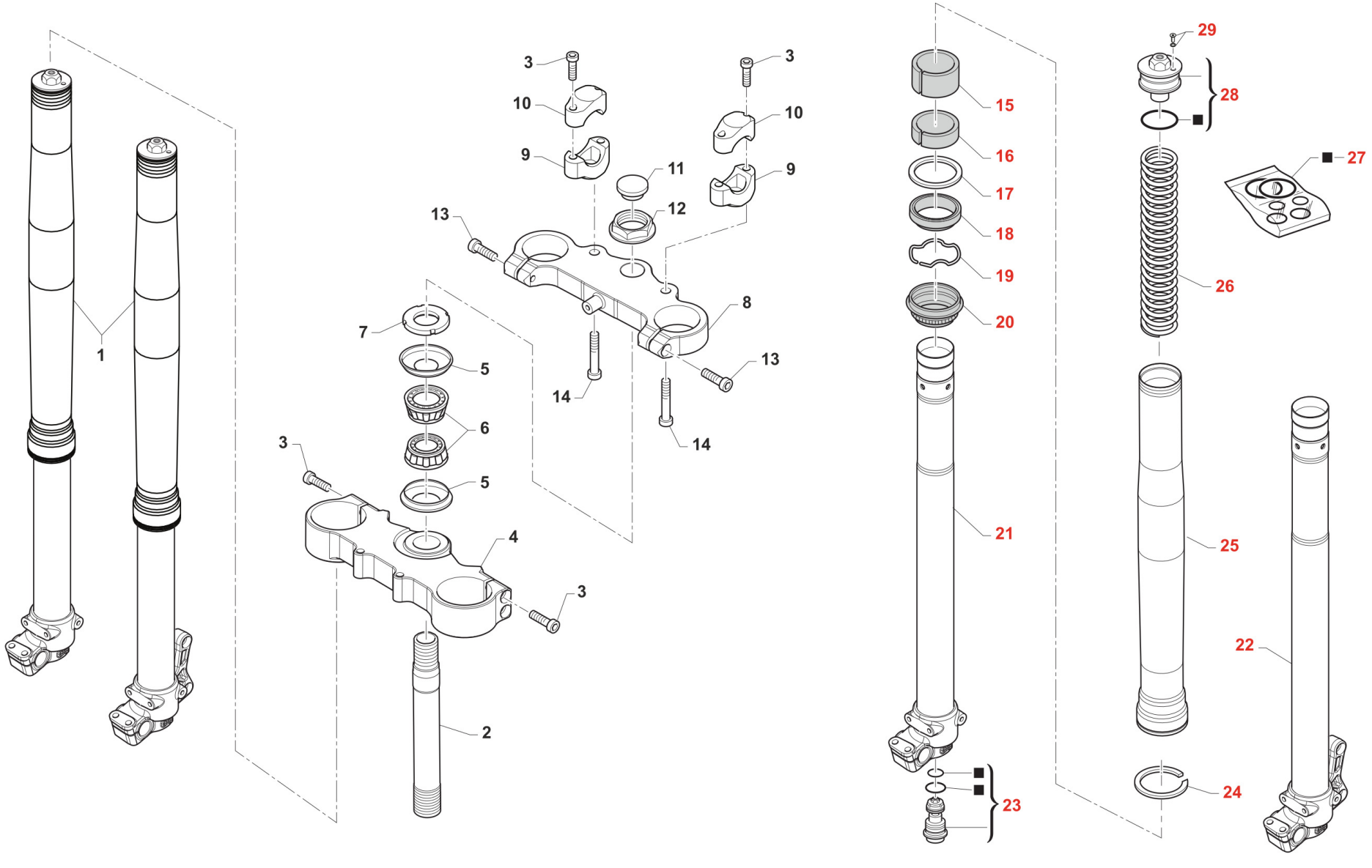

Pos.	Codice	Q.tà	Note	Descrizione	Description
1	72114.15	1		FORCELLA D39 JUNIOR 2015 FORM	
2	72097	1		CANOTTO STERZO 85J M. 13/->	STEERING STEM, JUNIOR MY13
3	49502	8		VITE TCEI 8X30	BOLT TCEI 8X30
4	72118	1		PIASTRA INF.FORC 85J 13/-> F39	FORK BRIDGE, BOTTOM 85J 13->
5	72002.01	2		PROTEZ. CUSC/CANOTTO STERZO JUN.13 ->	DUST SEAL, STEERING STEM J13->
6	03072	2		CUSCINETTO CONICO STERZO J '13	BUSH, STEERING JUNIOR 11/->
7	72099	1		GHIERA CANNOTTO STERZO J. 2011	NUT, STEERING BEARING 85J 11->
8	72119	1		PIASTRA SUP.FORC 85J 13/-> F39	FORK TRPLE CLAMP 85J 13->
9	72124	2		CAVALLOTTO INF. 85J M.13/->	LOWER HANDLEBAR 85J M.13->
10	72036.11	2		CAVALLOTTO SUP.M.11 SILVER	UPPER HANDLEBAR M.11 SILVER
11	21033	1		TAPPO PLAST.D25 -CANOT.STER.EN	PLASTIC CAP D.25mm STEER. AXE
12	72098	1		DADO CANOTTO STERZO 85J 13/->	NUT, STEERING BEARING 85J 13->
13	49501	2		VITE TCEI 8X25 UNI 5931	BOLT TCEI 8X25
14	49758	2		VITE TCEI 10X30	BOLT TCEI 10X30
15	72155	2		BOCCOLA DU 38X40X20 FORC.JU.13	BUSH DU 38X40X20 FORKS 85J
16	72154	2		BOCCOLA DU 39X43X15 FORC.JU.13	BUSH DU 39X43X15 FORKS 85J
17	72153	2		RONDELLA FERMA BOCC.PARAOL.J13	WASHER, BUSH F39 J
18	72150	2		PARAOLIO FORCELLA F39 JUNIOR 2013	OIL SEAL JUNIOR FRONT FORK
19	72152	2		ANELLO FERMA PARAOLIO FORC.J13	RING OIL SEAL RETAINER FORK J.
20	72151	2		PARAPOLVERE FORCELLA F39 JUNIOR 13	DUST SEAL JUNIOR FRONT FORK
21	72198	1		GRUPPO TUBO FORZA DX FORM.J85	
22	72197	1		GRUPPO TUBO FORZA SX FORMULA 39 M-XJ PIEDINO PINZA BRAKING	
23	72257	2		GRUPPO COMPRESSIONE FORC. FORMULA D.39	
24	72255	2		ANELLO DI PROTEZIONE FORMULA D.39	
25	72140	2		FODERO FORCELLA FORMULA USD D.39	
26	72156	2		MOLLA FORCELLA F39 J13 K=3.4	SPRING, FR FORK F39 J13 K=3.4
26	72158	2		MOLLA FORCELLA F39 J13 K=4.0	SPRING, FR FORK F39 J13 K=4.0

Pos.	Codice	Q.tà	Note	Descrizione	Description
26	72161	2		MOLLA FORCELLA F39 J13 K=3.6	
27	72256	1		GRUPPO RICAMBI OR E RONDELLE FORM. D.39	
28	72166	2		GRUPPO TAPPO SUP.FORC.FORM.J85	CAP, UPPER FORK FORMULA 85 J
29	72167	2		VITE + OR TAPPO SUP.FORC.FORMU	BLEED SCREW + OR, TOP CAP, FORK F39 85J
30	72658	4		VITE PIEDINO FORCELLA M6X30 FORMULA 39	

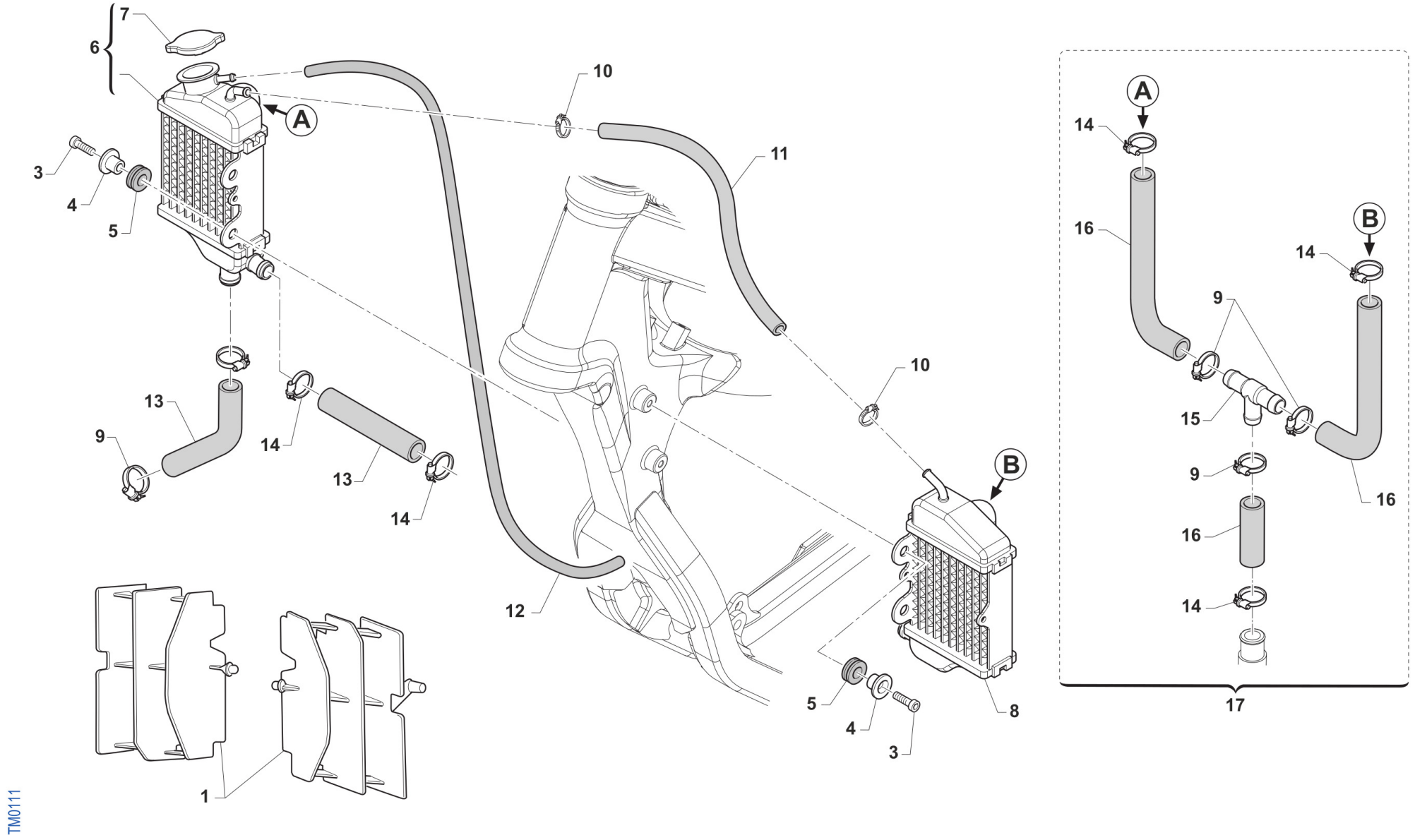
7
6
A
3
4
5
10
11
13
9
14
13
14
12
10
B
5
4
3
8
1
A
14
16
B
14
9
15
9
16
16
14
17
TM0111

Pos.	Codice	Q.tà	Note	Descrizione	Description
1	23130	1		KIT PROT. RADIATORI MX-J - NERE	
2	23131	1		KIT PROT. RADIATORI MX-J - BLU	
3	49484	4		VITE TCEI 6X20	BOLT TCEI 6X20
4	26064	4		BOCCOLA RADIATORE MY 02 / 06 ->	BUSH, RADIATOR M.02/06
5	21102	4		GOMMINO ANTIV.RADIAT.SILENZ. MY 94->	RUBBER, GROMMET RADIATOR and SILENC.
6	23067	1		RADIATORE 2T DX JUN MY19 FA L.TAP	RADIATOR RH JUNIOR
7	23062	1		TAPPO RADIATORE 1,8 BASSO(PER RADIATORE 23065)	RADIATOR CAP 1,8
8	23068	1		RADIATORE 2T SX JUN MY19 FA	RADIATOR LH JUNIOR
9	51036	4		FASCETTA A COLLARE DIAM.24 ZN	CLIP, WATER HOSE, d.24 ZN
10	51014	2		FASCETTA INOX 9 - 14 H5 IMBUT	BAND, INOX 9-14 H5 IMBUT
11	67036	1		TUBO ANTIBENZINA 8 x 14	HOSE, OIL/FUEL 8x14
12	67170	1		TUBO COPOLAN GRIGIO 5x9 mm	HOSE, COPOLAN GREY 5x9 mm
13	21020	1		MANICOTTO ACQUA LUNGO 90	HOSE, RUBBER 90cms
14	51062	5		FASCETTA A COLLARE DIAM.22 ZN	CLIP, WATER HOSE, d.22 ZN
15	21071	1		Raccordo a T radiatori Junior 2019	JOINT, RADIATOR JUNIOR
16	F21413.1	2		MANICOTTO ACQUA RADIATORE 05->	WATER HOSE RADIATOR M.2005
17	21122.19	1		MANICOTTO COLL. TESTA A RAD DX E SX 85J	HOSES KIT WATER, HEAD TO COOLER 85J

SERBATOIO
FUEL TANK

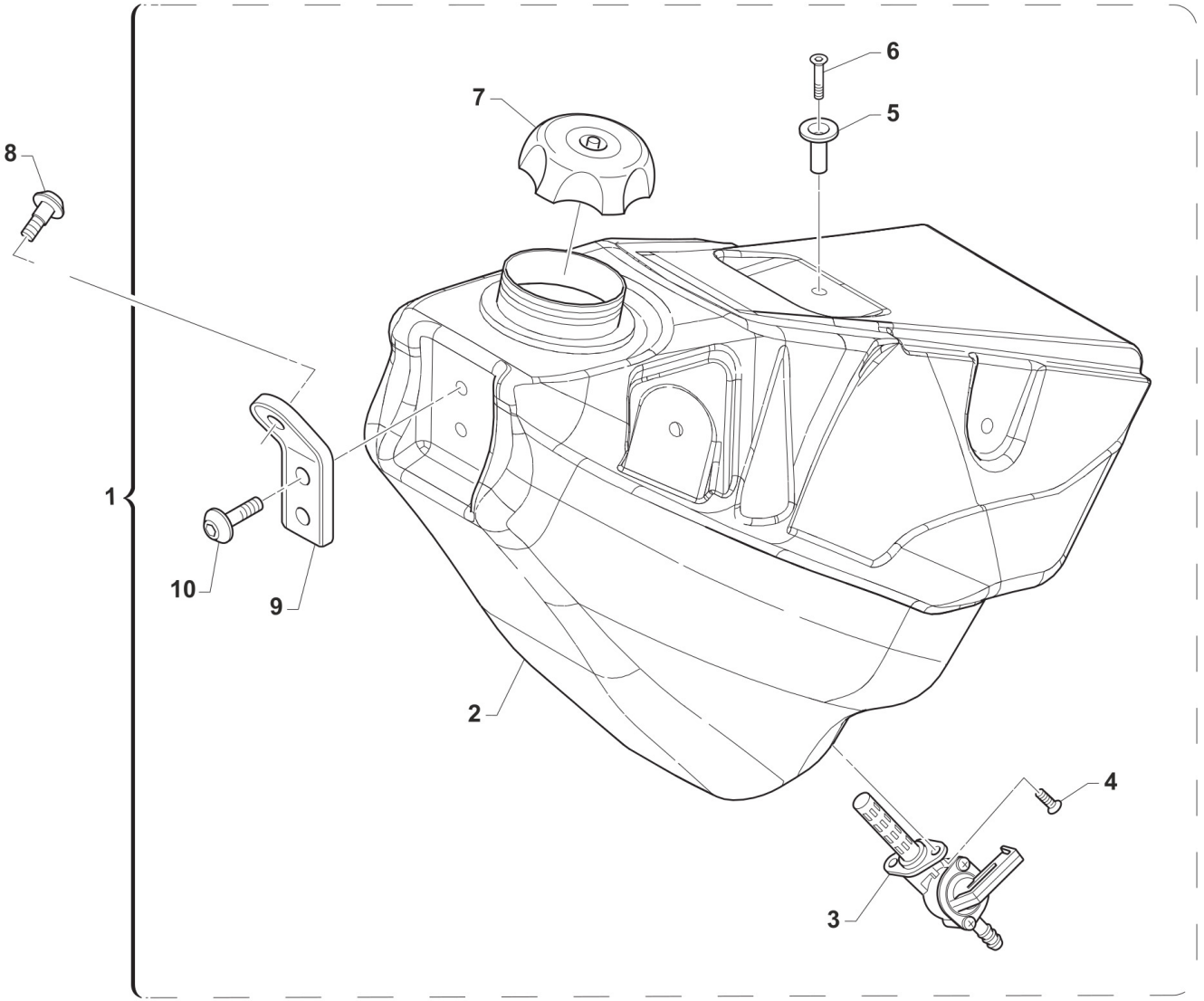

TM0112

Pos.	Codice	Q.tà	Note	Descrizione	Description
1	67320	1		SERBATOIO 85J COMPLETO M.13/-> PLASTICA	FUEL TANK ASSY, JUNIOR
2	67311	1		SERBATOIO 85J M.13/-> PLASTICA NERO	FUEL TANK 85J M.13->
3	65061	1		RUBINETTO BENZINA DIRITTO J-13/ carb 2022senza riserva	
4	49435	2		VITE TE 5X12	SCREW TE 5X12
5	26083	1		BOCCOLA FISS.SELLA/SERBAT. M08	BUSH, FIX SEAT / TANK M.08->
6	49404	1		VITE TSEI 6X16	BOLT TSEI 6x16
7	65009	1		TAPPO SERBATOIO PICC.98-07/ 15	CAP, FUEL TANK M.98/07
8	F49822	1		VITE ES.FLANG.M6X12 T.AL.M08	BOLT, 6X12 AL. FRAME M.08->
9	26082	1		PIASTRINO PL.SERBATOIO M 08/10	PLASTIC PLATE TANK M.08->10
10	49574	2		VITE TBCE 6 x 12 PLASTICHE	BOLT TBCE 6x12

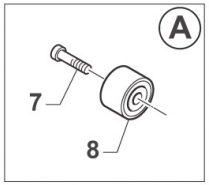

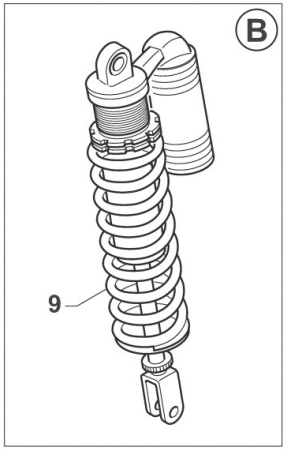

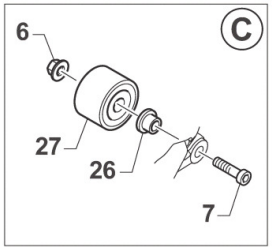

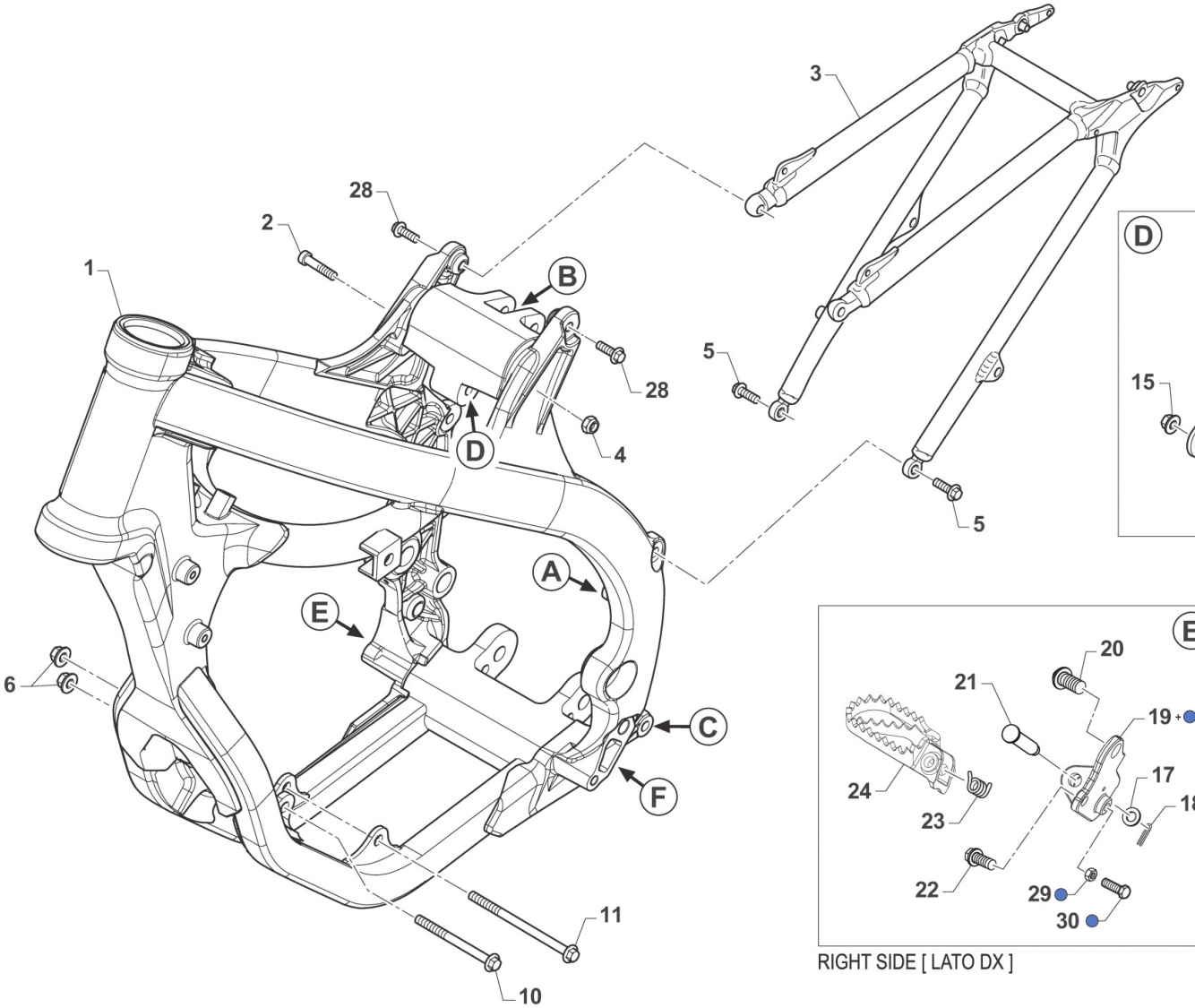

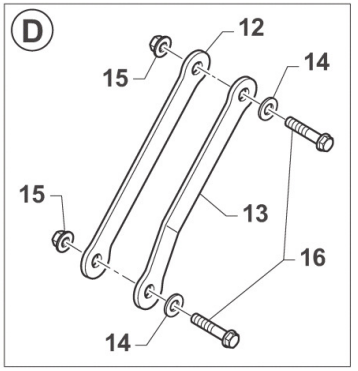

RIGHT SIDE [LATO DX]

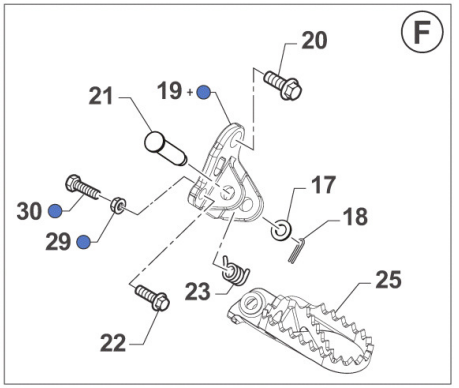

LEFT SIDE [LATO SX]

TM 0113.01

Pos.	Codice	Q.tà	Note	Descrizione	Description
1	73000.13	1		TELAIO MOTO 80/85/100 AL J13	FRAME JUNIOR MY13
2	49792	1		VITE TE F/R 10X54 1.25 T.AL08	BOLT, M10X1.25X54 ALU.FRAME08
3	73002.12	1		CODINO TELAIO 85 JUNIOR M. 13	REAR SUBFRAME 85J M.13->
4	49681	1		DADO M 10 X 1,25 CH 14 FLANG. AUTOBLOCK	NUT M10x1,25 FLANGED SELF-LOCK
5	49724	2		VITE TE F/R 8X21	BOLT TE F/R 8x21
6	49680	3		DADO M 8 X 1,25 CH 12 FLANG. AUTOBLOCK	NUT, M 8X1,25 FLANG. SB
7	49366	2		VITE TE F/R 8X40 Ch.10	BOLT 8X40 T.10mm
8	67088	1		ROTELLA CATENA M. 90/07	CHAIN ROLLER M.90/07
9	72132	1		AMMORTIZZATORE EXTREMETECH MY13 MX-J	SHOCK ABSORBER EXTREMETECH J13
10	49353	1		VITE TE F/R 8X90 1.25 Ch.10	SCREW TE F/R 8X90 1.25 Ch.10
11	49354	1		VITE TE F/R 8X120 1.25 Ch.10	SCREW TE F/R 8X120 1.25 T.10
12	26228	1		PIASTRA TIRANTE 85/100 J DX MY 13/->	PLATE RH, CYLINDER/FRAME 85-100 J
13	26229	1		PIASTRA TIRANTE 85/100 J SX MY 13/->	PLATE LH, CYLINDER/FRAME 85-100 J
14	49611	2		RONDELLA ACCIAIO 8	WASHER STEEL 8mm
15	49680	2		DADO M 8 X 1,25 CH 12 FLANG. AUTOBLOCK	NUT, M 8X1,25 FLANG. SB
16	49445	2		VITE TE 8X50 UNI 5737	BOLT EH 8X50
17	49612	2		RONDELLA ACCIAIO 10	STEEL WASHER 10
18	73036	2		COPIGLIA PEDANA MY 92/->	COTTER PIN FOOTPEG MY 92/->
19	73149	2		KIT ATT. PEDANE RIBASSATE JUN	FOOT PEG LOWERING KIT JUNIOR
20	49382	2		VITE ESAG.FLANG.M12X25 T.A.	BOLT 12 X 25 FLANGE
21	73064	2		PERNO PEDANE M.08-> X T.ALLUM.	PIN, FOOT PEG, 08/->
22	49383	2		VITE ESAG.FLANG.M8X1.25X20 T.A	BOLT 8 X 20 FLANGE
23	16022	2		MOLLA RITORNO PEDANE M.08/->	SPRING, FOOT PEG PIN 08/->
24	73048.10	1		PEDANA DX MOD. 2010	FOOTPEG, RIGHT M.10->
25	73049.10	1		PEDANA SX MOD. 2010	FOOTPEG, LEFT M.10->
26	26141	1		BOCCOLA ROTELLA CATENA.JUN'13	BUSH, CHAIN WHEEL JUNIOR 13->
27	67088.08	1		ROTELLA CATENA M. 08/->	CHAIN ROLLER 08/->
28	49364	2		VITE TE F/R 8X25 Ch.10	BOLT, EH 8X25 To.10 mm

Pos.	Codice	Q.tà	Note	Descrizione	Description
29	49642	2		DADO M 8	NUT 8mm
30	49452	2		VITE TE 8X30	

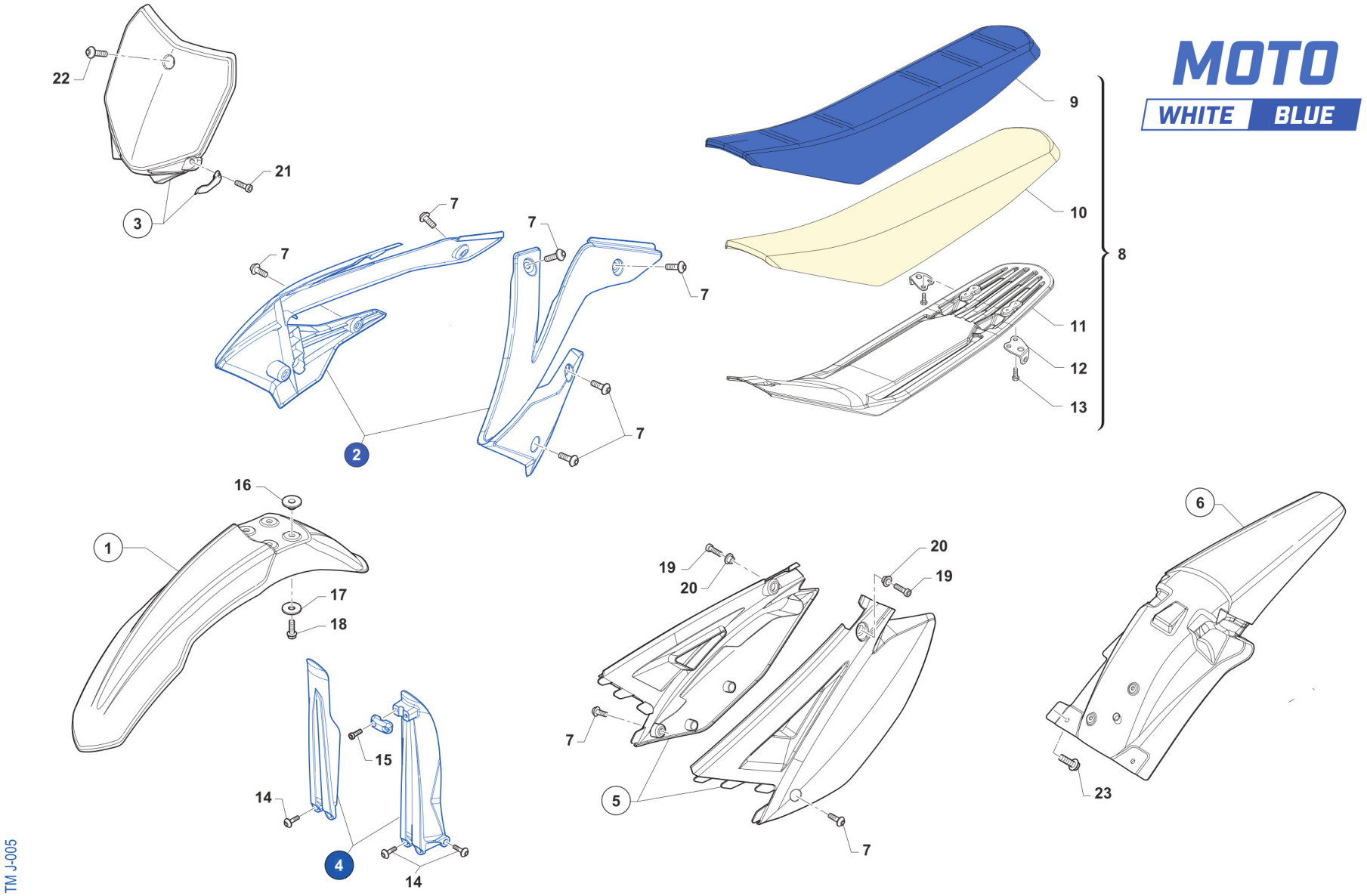
MOTO
WHITE
BLUE
22
21
3
7
7
7
7
7
2
9
10
8
11
12
13
16
1
17
18
15
14
4
14
19
20
20
19
7
5
7
6
23
TM J-005

Pos.	Codice	Q.tà	Note	Descrizione	Description
1	67316	1		PARAFANGO ANTERIORE JUN'13 BNC	MUDGUARD, FRONT JUNIOR 13WHITE
2	67555	1		SET CONV. ARIA 2T 85 J MY 2027 BLU TM	
3	67317	1		PORTANUMERO ANT 85J 13/-> BNC CON PASSACAVO	FRONT NUMBER PLATE 85J WHITE
4	67302	1		KIT PROTEZ.FORC.JUN'13 CPL BLU CON PASSACAVO	FORK PROT. ASSY JUN'13 BLU
5	67322	1		SET LAT P.NUM 2T 85 J MY 2013/2020 BIANCHI	SIDE PANELS SET, REAR, JUNIOR MY13 - WHITE
6	67308	1		PARAFANGO POSTERIORE JUNIOR'13 BNC	MUDGUARD REAR JUNIOR 13->
7	49574	10		VITE TBCE 6 x 12 PLASTICHE	BOLT TBCE 6x12
8	67309.15	1		SELLA JUNIOR MODELLO 2015	
9	67314	1		COPERTINA SELLA JUNIOR BLU M13	SEAT, COVER JUNIOR BLU M.13
10	67309.00	1		SPUGNA SELLA JUNIOR 13->	FOAM, SEAT JUNIOR M.13->
11	67310	1		FONDO SELLA JUNIOR 2013	
12	73047	2		PIASTRINO AL ATT.SELLA POSTER.	PLATE AI REAR SEAT HOLDER
13	49435	4		VITE TE 5X12	SCREW TE 5X12
14	490010	6		VITE TBCE 6 x 9 PLASTICHE	
15	49474	2		VITE TCEI 5X16 UNI 5931	BOLT TCEI 5X16
16	26132	4		BOCCOLA PARAF. ANT. M12	BUSH, FRONT MUDGUARD M.12->
17	49117	4		RONDELLA 18X6.5X2 X RADIAT.08	WASHER 18X6.5X2 RADIATOR 08
18	49356	4		VITE TE F/R 6X20 Ch.8	BOLT 6X20 T.8
19	49484	2		VITE TCEI 6X20	BOLT TCEI 6X20
20	26059	2		BOCCOLA FISS.SELLA & LAT.03/->	COLLAR, SEAT/SIDE PANEL 03/->
21	49470	1		VITE TCEI 4X12	BOLT TCEI 4X12
22	49571	1		VITE TBCE 6 x 7 PROT. FORCELLA	BOLT TBCE 6x7
23	49356	2		VITE TE F/R 6X20 Ch.8	BOLT 6X20 T.8

FILTRO ARIA
AIR FILTER

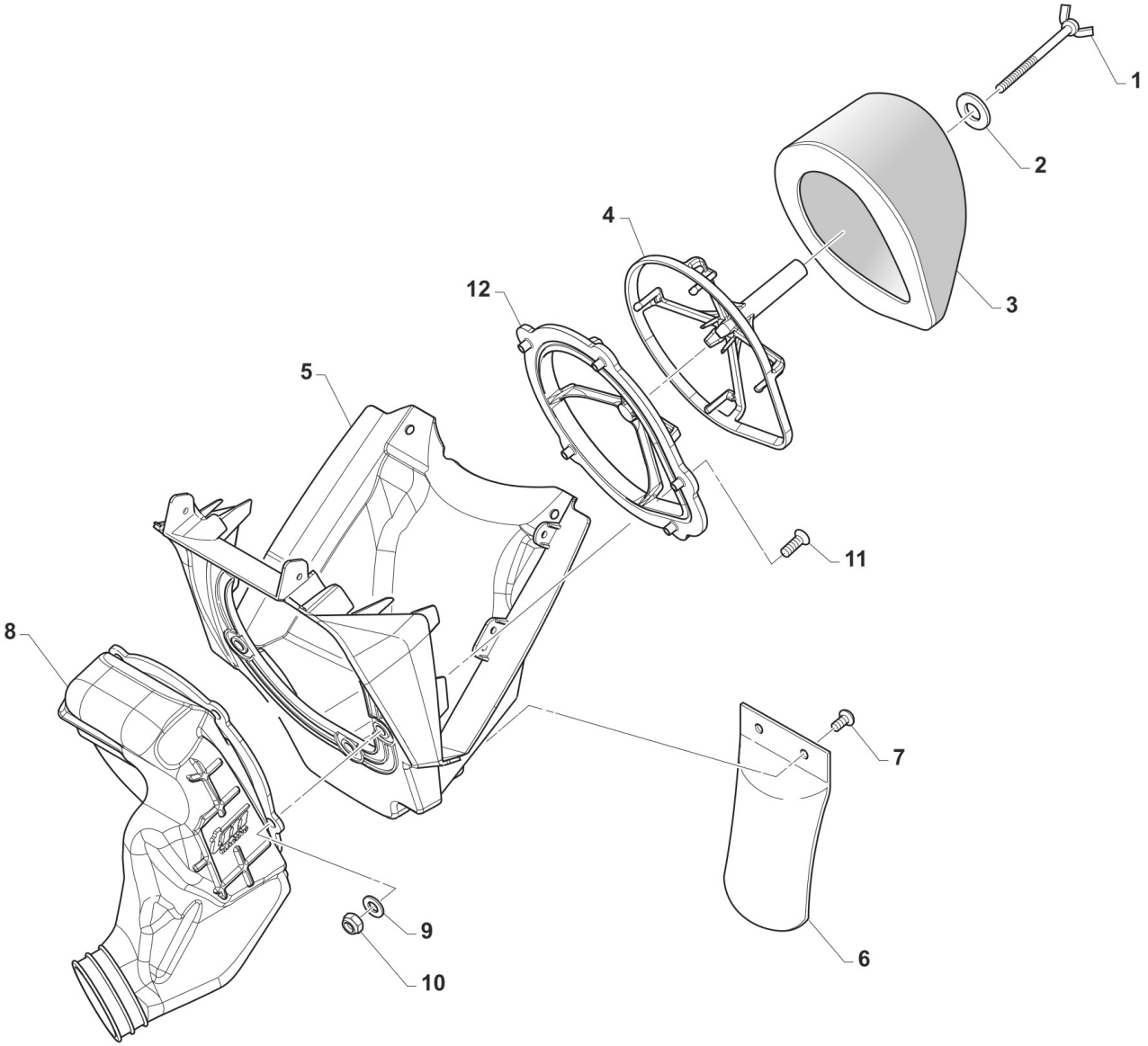

TM0115

FILTRO ARIA
AIR FILTER

Pos.	Codice	Q.tà	Note	Descrizione	Description
1	49324	1		GALLETTO C/PERNO FILTRO 6x70	SCREW WITH PIN AIR FILTER 6X70
2	26084	1		RONDELLA PARAF ANT. 24x2 M.08	WASHER, FRONT FENDER 24 X 2
3	66060	1		FILTRO ARIA 2T/4T/85 M.13/14ES	AIR FILTER M. 2013 ES
4	66062	1		GABBIA FILTRO M.2013 ES/J'13	CAGE, AIR FILTER 66060 ES/J'13
5	67305	1		CASSA FILTRO JUNIOR 2013 CPL	AIR BOX 85 JUNIOR M.13-> ASSY
6	67104	1		PROTEZIONE MONO MOD. 92/->	GUARD, SHOCK ABSOVER M. 92/->
7	49320	2		VITE TB LARGA 6X15(16)LATERALI	BOLT TB LARGE 6X15(16)
8	67312	1		CUFFIA CASSA FILTRO JUN.2013	AIR BOOT JUNIOR MY13
9	49602	5		RONDELLA 5 x 15 x 1,2	WASHER 5x15
10	49629	5		DADO M 5 ALTO AUTOBLOCCANTE	NUT 5mm, HIGHT SELF-LOCKING
11	49402	5		VITE TSEI 5X20	BOLT TSEI 5X20
12	66017	1		PIASTRA MANIC. C.FILTRO 2013	PLATE, AIR FILTER MANIFOLD 13

FORCELLONE
SWINGARM

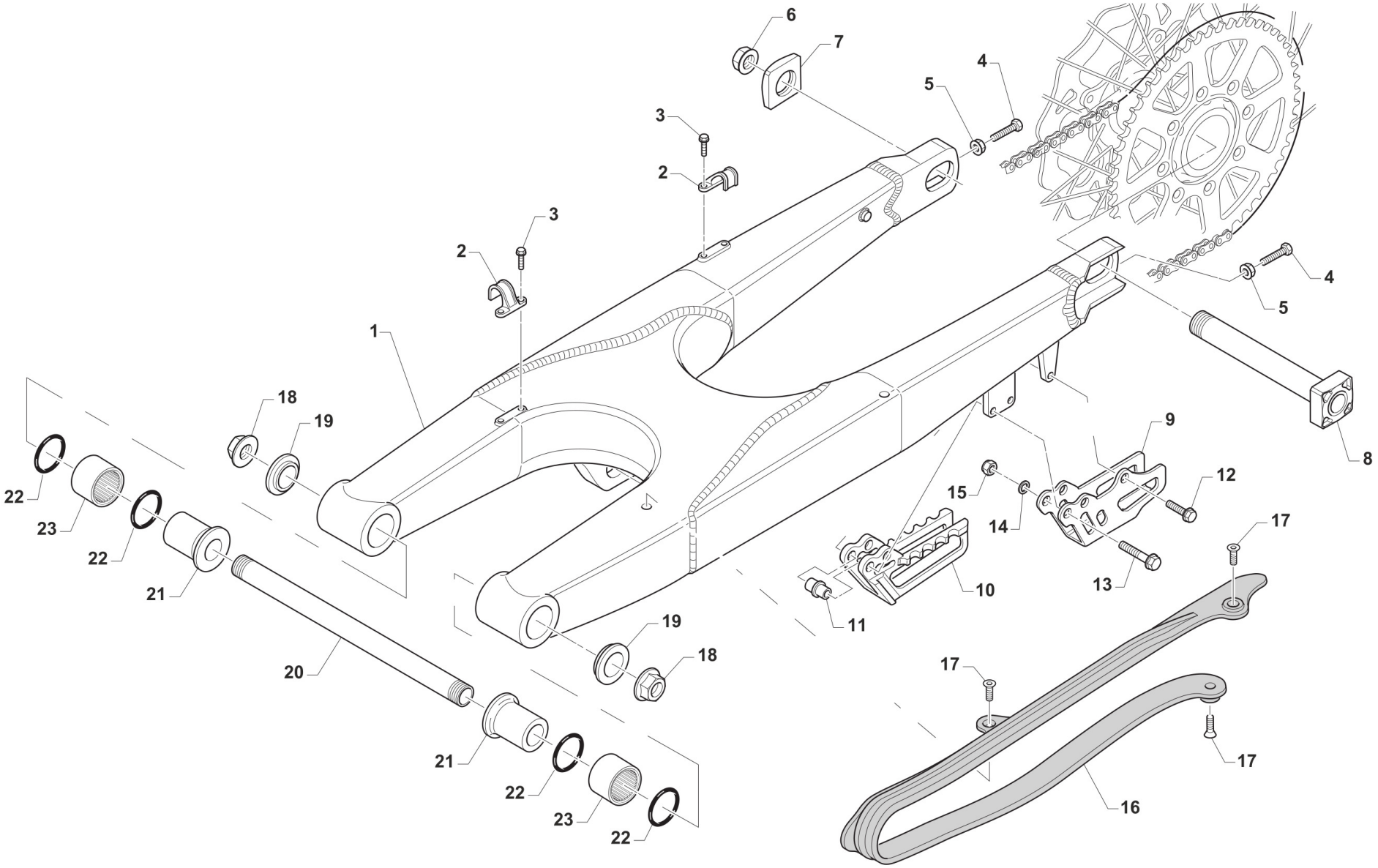

Pos.	Codice	Q.tà	Note	Descrizione	Description
1	73001.13	1		FORCELLONE 85 JUNIOR M. 13/->	SWINGARM JUNIOR MY13
2	67054	2		FERMA TUBO FRENO POST. M.97/->	RETAIN CLAMP BRAKE HOSE 97/->
3	49794	4		VITE AUTOFOR. 4.8X16 7504	BOLT, 4,8 X 16 7504
4	F49976	2		VITE TE 8X45 ES.10 FORCELLONE	SCREW TE 8X45 SWINGARM
5	49640	2		DADO M 8 FLANGIATO CHIAVE 12	NUT 8mm, FLANGE
6	49115	1		DADO PERNO R.PST J 06 CH20X1.5	NUT, RR WHEEL JUNIOR 20X1.5
7	70225	1		TENDICATENA JUNIOR'13 MOBILE	ADJ BLOCK, CHAIN JUNIOR 2013
8	74045.13	1		PERNO RUOTA POST. JUNIOR 2013	AXLE, RR WHEEL JUNIOR 2013
9	73130	1		PASSACATENA ALLUM. MOD. 11/->	PLATE, CHAIN GUIDE M. 11/->
10	67102.10	1		PASSACATENA NYLON MOD.2011	GUIDE, CHAIN M. 11/->
11	26092	1		BOCCOLA PASSACATENA M.11->	BUSH, CHAINGUIDE M11->
12	49370	1		VITE TE F/R 6X12	BOLT 6X12
13	49362	2		VITE TE F/R 6X50 Ch.8	BOLT 6X50 T.8
14	49603	2		RONDELLA M 6,4 X 12 X 1,6	WASHER 6x12
15	49638	2		DADO M 6 ALTO AUTOBLOCCANTE	NUT 6mm, HIGHT SELF-LOCKING
16	67099.15	1		PROTEZIONE FORCELLONE M.2015	SWINGHARM PROTECTION M.2015
17	49396	3		VITE TSEI 5X10	BOLT TSEI 5X10
18	49095	2		DADO 16 FORCELLONE MOTO 95/10	NUT, SWINGARM AXLE M. 95/05
19	73115	2		COPERCHIO BOCCOLA FORC. M08->	COLLAR, SWINGARM M.08
20	74013	1		PERNO FORCELLONE M.95/07 85J13	AXLE, SWINGARM 16 M. 95/06
21	73138	2		BOCCOLA FORC.J'13 F16 30X44.5	BUSH JUNIOR FORK H.16 30X44,5
22	12102	4		O RING LEVERAGGIO & FORCELLONE	O-RING, LINKAGE & SWINGARM
23	19043	2		ASTUCCIO A RULLI HK 2030	NEEDLE CAGE HK 20/30

LEVERAGGI
LINKAGE

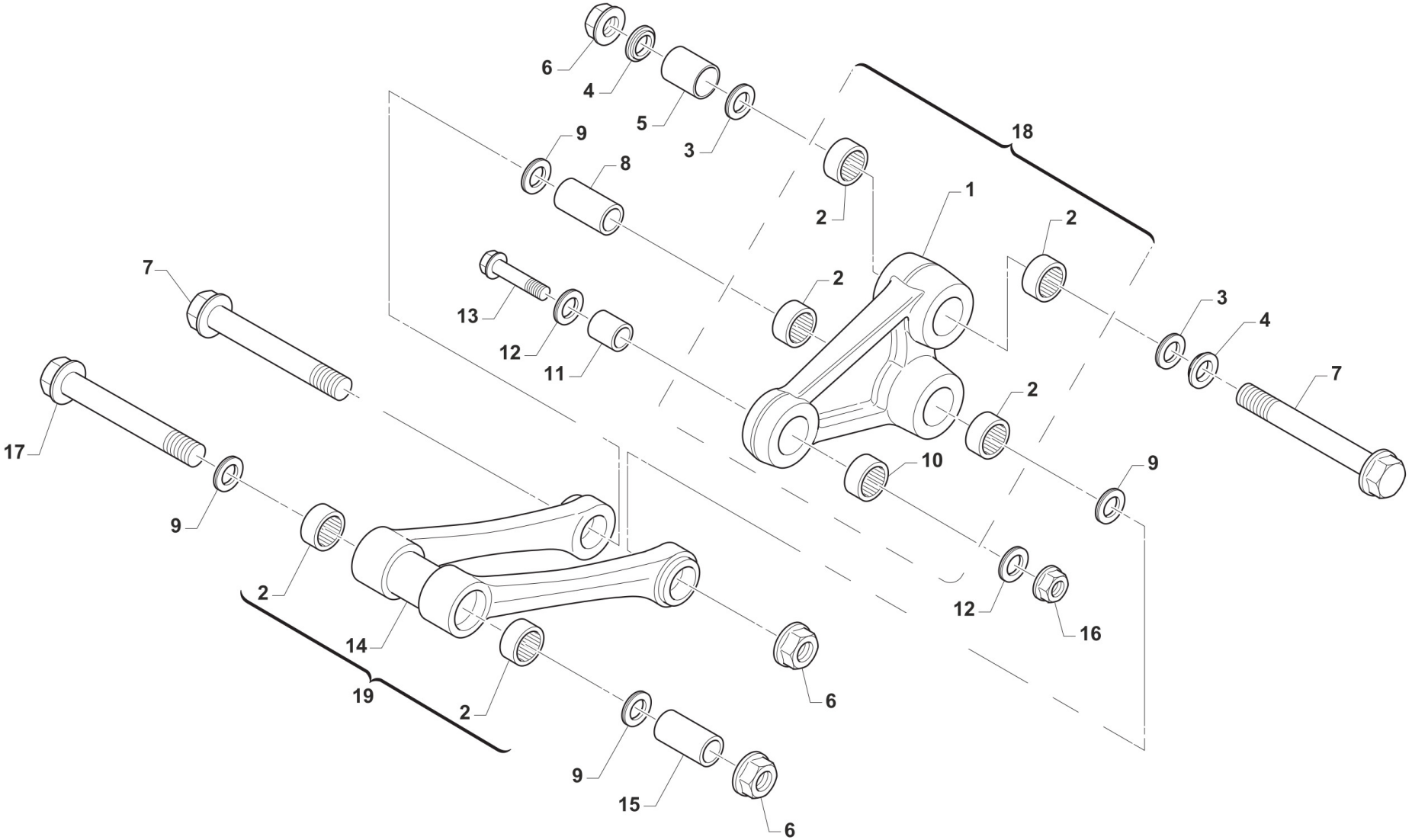

TM0117

Pos.	Codice	Q.tà	Note	Descrizione	Description
1	73134	1		TRIANGOLO SOSP. 85J 13/-> NUDO	ARM, LINKAGE
2	19106	6		GABBIA RULLINI DL 2016 KYU	BUSH NEEDLE CAGE 26 X 20 H16
3	12010	2		O RING ORM 0240-30 TRIANG.05/6	O-RING, LINKAGE 05/6 ORM 0240-30
4	73075	2		COPERCHIO BOCCOLA TRIANG '05	COVER, BUSH
5	73211	1		BOCCOLA TRIANG. 20x38 F12 05/->	BUSH, ARM RELAY 12X20X38
6	49682	3		DADO M12X1,25 FLANG.AUTOBL.AC	NUT, M 12 x 1,25 FLANGE SL
7	49345	1		VITE TE F/R 12X90 1.25 Ch13	BOLT TE F/R 12X90 1.25 T.13
8	F73416	1		BOCCOLA TRIANG. 20x48 F12 05/->	COLLAR, ROD M.04 12x20x48
9	12102	4		O RING LEVERAGGIO & FORCELLONE	O-RING, LINKAGE & SWINGARM
10	19101	1		GABBIA RULLINI DL 1812 KYU	BUSH NEEDLE CAGE DL 18/12
11	73214	1		BOCCOLA 18 X 20 F.10 TRIANGOLO 07/->	COLLAR, ARM ASSY 10 18X20 M.07
12	F12312	2		O RING FILTRO OLIO P.ASPIRAZ.+LEV.	O-RING, OIL FILTER
13	49791	1		VITE TE F/R 10X39 1.25 T.AL08	BOLT, M10X1.25X39 ALU.FRAME08
14	73135	1		TRAPEZIO SOSP. 85J 13/-> NUDO	ROD, LINKAGE
15	73204	1		BOCCOLA TRAPEZIO 20 x 74 F.12	BUSHING 20x74x12, ROD SUSP. 05
16	F49874	1		DADO M 10 X 1,25 CH 12 FLANGIATO	NUT FLANGED M 10x1,25 T.12mm
17	49884	1		VITE TE F/R 12X110 LEV.85J13->	BOLT TE F/R 12X110 LINKAGE 85J
18	73142	1		TRIANGOLO SOSP. 85J 13/-> CPL	ARM ASSY JUNIOR
19	73143	1		TRAPEZIO SOSP. 85J 13/-> CPL	ROD ASSY JUNIOR

RUOTA POST 14 X 1.60
REAR WHEEL 14 X 1.60

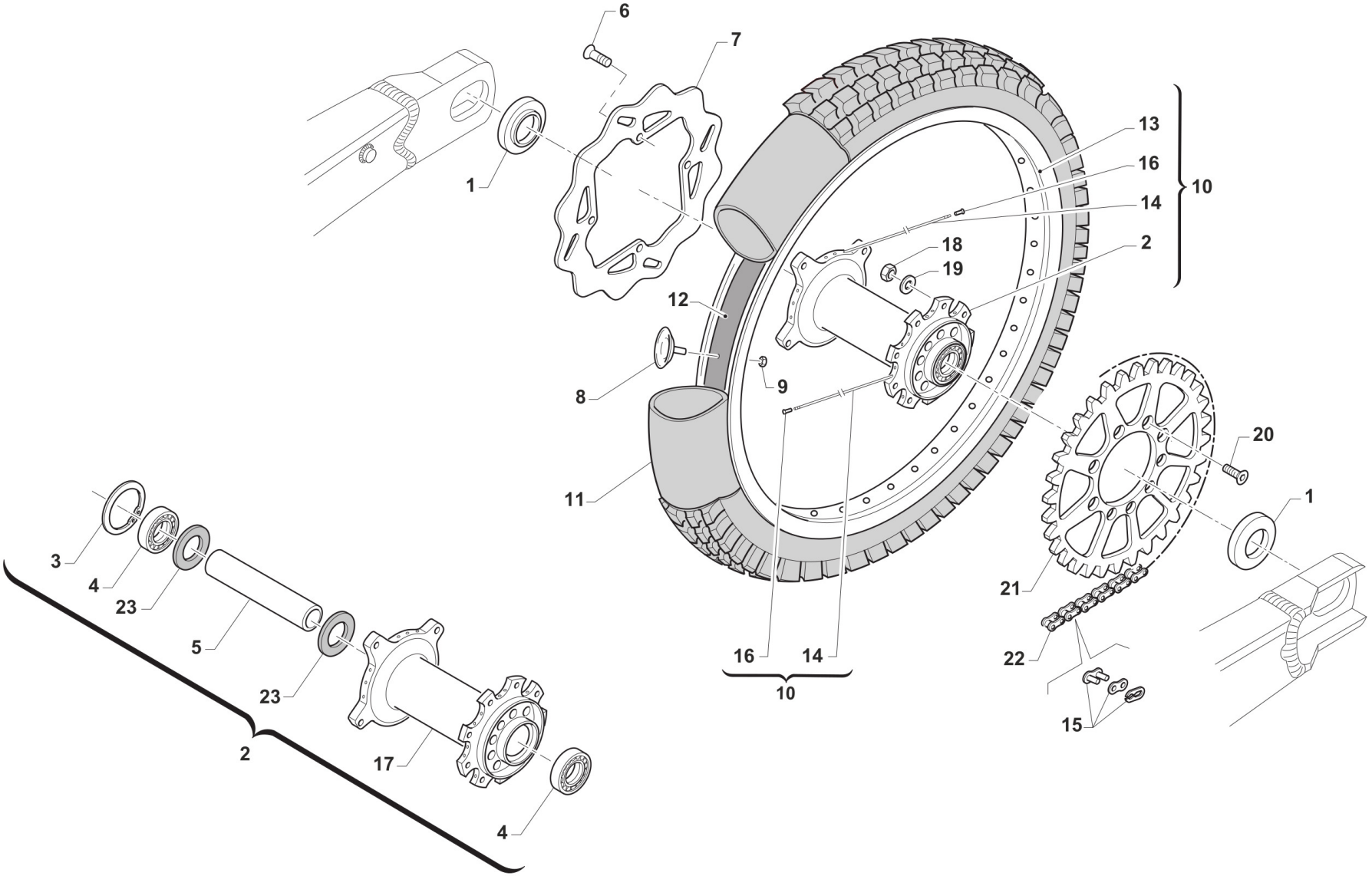

TM J-006

Pos.	Codice	Q.tà	Note	Descrizione	Description
1	26104	2		BOCCOLA CUSC.POS.80J 35X17 D/S	BUSH, RR WHEEL BEAR. 85J 35X17
2	70228	1		MOZZO POST 80/85J 13/-> CPL	HUB REAR WHEEL 85J 13-> ASSY
3	49249	1		SEEGER I 40 RUOTA POST.JUNIOR	SEEGER I 40
4	03067	2		CUSCINETTO RUOTA POST. 80/85 Jun.	BUSH, REAR WHEEL 80/85cc Jun.
5	70232	1		DIST.INT.R.POST. JUN'2013	INNER SPACER REAR WHEEL J.13->
6	49440	4		VITE TE 6X14	BOLT TE 6X14
7	69308	1		DISCO FRENO 190X3.5 PST 85J 18MM	BRAKE DISK, REAR 85J 190x3.5 18mm
8	70030.1	1		FERMA COPERTURA RUOTA ANTER. 1.60	STOPPER 1.60
9	49640	1		DADO M 8 FLANGIATO CHIAVE 12	NUT 8mm, FLANGE
10	70043	1	14" X 1.60	CERCHIO POST 14x1.60 JUNIOR TK	REAR RIM 14x1,60 JUN. Tagasago
11	80121	1	14"	CAMERA ARIA 14 J	INNER TUBE REAR WHEEL 14 J
12	70036	1	14"	FLAP RUOTA POSTERIORE 14 MX-J	FLAP REAR WHEEL 14
13	70233	1	14"	CERCHIO PST.CPL. 80 J 14 13->	RIM REAR ASSY 80J 14 M.13->
14	70255	28	14"	RAGGIO RUOTA 14 166X4/3.1/4 J	SPOKE, 14 WHEEL 166X4/3.1/4 J
15	70097	1		GIUNTO CATENA 126 HK 85j	CHAIN, JOINT 126 RH
16	70062	28		NIPPLO ACCIAIO 4	SPOKE NIPPLE 4 mm
17	70321	1		MOZZO POST 85J NUDO VMX MY2022	
18	49643	7		DADO M 8 BASSO AUTOBLOCCANTE	NUT 8mm, LOW SELF-LOCKING
19	49611	7		RONDELLA ACCIAIO 8	WASHER STEEL 8mm
20	49421	7		VITE TSEI 8X25	BOLT TSEI 8X25
21	70104.48	1		CORONA CAT. 85 JUNIOR - Z 48	SPROCKET 48T 85cc JUNIOR
21	70104.49	1		CORONA CAT. 85 JUNIOR - Z 49	SPROCKET 49T, REAR, JUNIOR
21	70104.50	1		CORONA CAT. 85 JUNIOR - Z 50	
21	70104.51	1		CORONA CAT. 85 JUNIOR - Z 51	SPROCKET 51T 85cc JUNIOR
21	70104.52	1		CORONA CAT. 85 JUNIOR - Z 52	SPROCKET 52T, REAR, JUNIOR
21	70104.53	1		CORONA CAT. 85 JUNIOR - Z 53	SPROCKET 53T, REAR, JUNIOR
21	70104.54	1		CORONA CAT. 85 JUNIOR - Z 54	SPROCKET 54T, REAR, JUNIOR
21	70104.55	1		CORONA CAT. 85 JUNIOR - Z 55	SPROCKET 55T, REAR, JUNIOR

Pos.	Codice	Q.tà	Note	Descrizione	Description
22	70092.1	1		CATENA REGINA 126 MG 85J	CHAIN 126 RX3 X 126 85J
23	70227	2		RONDELLA GOMMA 39X21X3 D.I.JUN	RUBBER WASHER 39X21X3 JUNIOR

RUOTA POST 16 X 1.85
REAR WHEEL 16 X 1.85

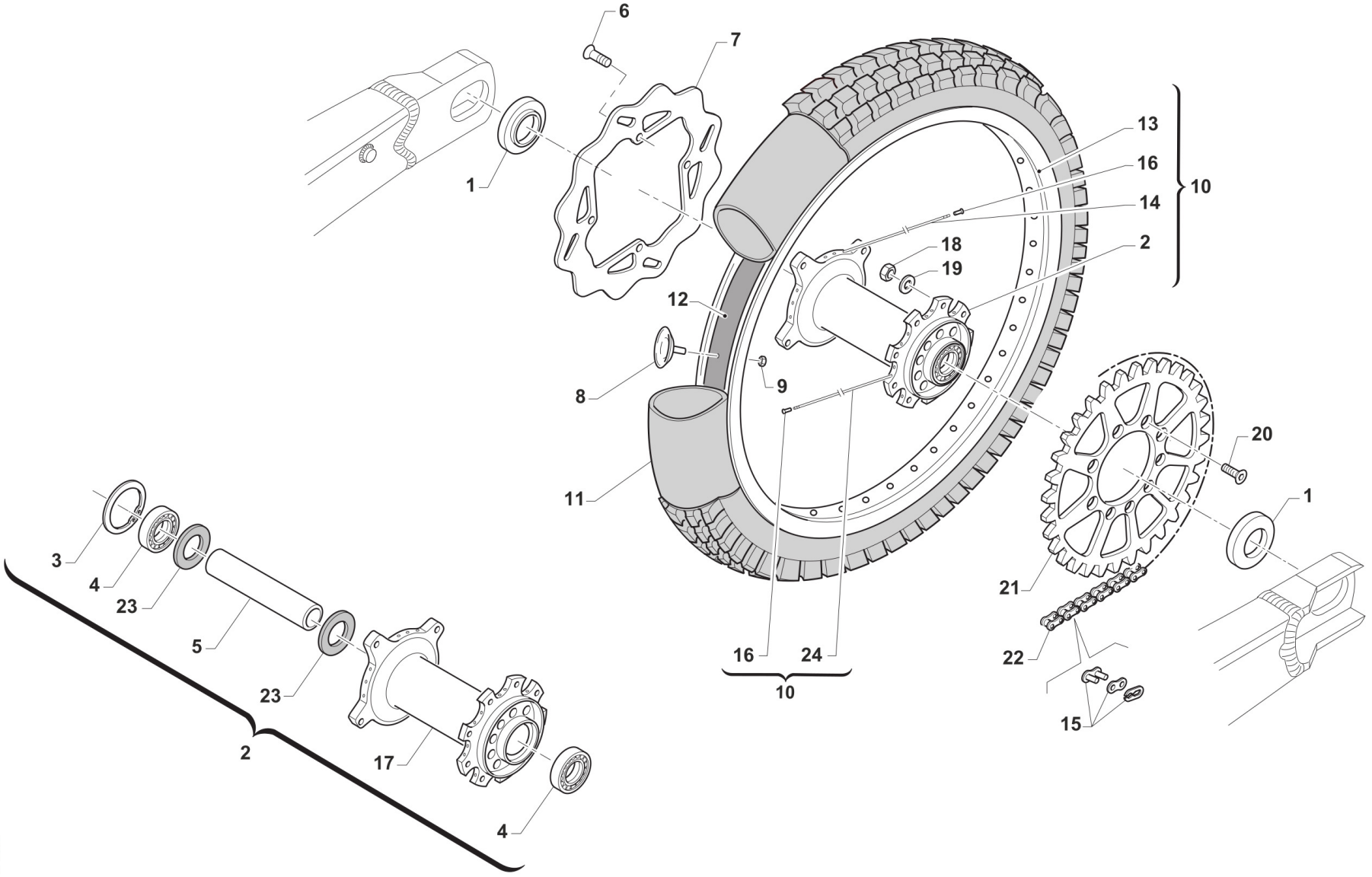

Pos.	Codice	Q.tà	Note	Descrizione	Description
1	26104	2		BOCCOLA CUSC.POS.80J 35X17 D/S	BUSH, RR WHEEL BEAR. 85J 35X17
2	70228	1		MOZZO POST 80/85J 13/-> CPL	HUB REAR WHEEL 85J 13-> ASSY
3	49249	1		SEEGER I 40 RUOTA POST.JUNIOR	SEEGER I 40
4	03067	2		CUSCINETTO RUOTA POST. 80/85 Jun.	BUSH, REAR WHEEL 80/85cc Jun.
5	70232	1		DIST.INT.R.POST. JUN'2013	INNER SPACER REAR WHEEL J.13->
6	49440	4		VITE TE 6X14	BOLT TE 6X14
7	69308	1		DISCO FRENO 190X3.5 PST 85J 18MM	BRAKE DISK, REAR 85J 190x3.5 18mm
8	70027	1		FERMA COPERTURA POST. 1.85	STOPPER 1,85, TUBE
9	49640	1		DADO M 8 FLANGIATO CHIAVE 12	NUT 8mm, FLANGE
10	70041	1	16" X 1.85	CERCHIO POST 16x1.85 JUNIOR TK	REAR RIM 16x1.85 JUN. Tagasago
11	80120	1	16"	CAMERA ARIA 16 J	INNER TUBE REAR WHEEL 16 J
12	70037	1	16"	FLAP RUOTA POSTERIORE 16 MX-J	FLAP FRONT WHEEL 16
13	70235	1	16"	CERCHIO PST CPL 85J 16 13/->	WHEEL, REAR ASSY 85J 16 13->
14	70256	14		RAGGIO RUOTA 16 4/3.1/4X187 J (L.CORONA)	SPOKE F.WHEEL J 16 4/3.1/4 X187
15	70097	1		GIUNTO CATENA 126 HK 85j	CHAIN, JOINT 126 RH
16	70062	28		NIPPLO ACCIAIO 4	SPOKE NIPPLE 4 mm
17	70321	1		MOZZO POST 85J NUDO VMX MY2022	
18	49643	7		DADO M 8 BASSO AUTOBLOCCANTE	NUT 8mm, LOW SELF-LOCKING
19	49611	7		RONDELLA ACCIAIO 8	WASHER STEEL 8mm
20	49421	7		VITE TSEI 8X25	BOLT TSEI 8X25
21	70104.48	1		CORONA CAT. 85 JUNIOR - Z 48	SPROCKET 48T 85cc JUNIOR
21	70104.49	1		CORONA CAT. 85 JUNIOR - Z 49	SPROCKET 49T, REAR, JUNIOR
21	70104.50	1		CORONA CAT. 85 JUNIOR - Z 50	
21	70104.51	1		CORONA CAT. 85 JUNIOR - Z 51	SPROCKET 51T 85cc JUNIOR
21	70104.52	1		CORONA CAT. 85 JUNIOR - Z 52	SPROCKET 52T, REAR, JUNIOR
21	70104.53	1		CORONA CAT. 85 JUNIOR - Z 53	SPROCKET 53T, REAR, JUNIOR
21	70104.54	1		CORONA CAT. 85 JUNIOR - Z 54	SPROCKET 54T, REAR, JUNIOR
21	70104.55	1		CORONA CAT. 85 JUNIOR - Z 55	SPROCKET 55T, REAR, JUNIOR

Pos.	Codice	Q.tà	Note	Descrizione	Description
22	70092.1	1		CATENA REGINA 126 MG 85J	CHAIN 126 RX3 X 126 85J
23	70227	2		RONDELLA GOMMA 39X21X3 D.I.JUN	RUBBER WASHER 39X21X3 JUNIOR
24	70256	14	16"	RAGGIO RUOTA 16 4/3.1/4X187 J (L.CORONA)	SPOKE F.WHEEL J 16 4/3.1/4 X187

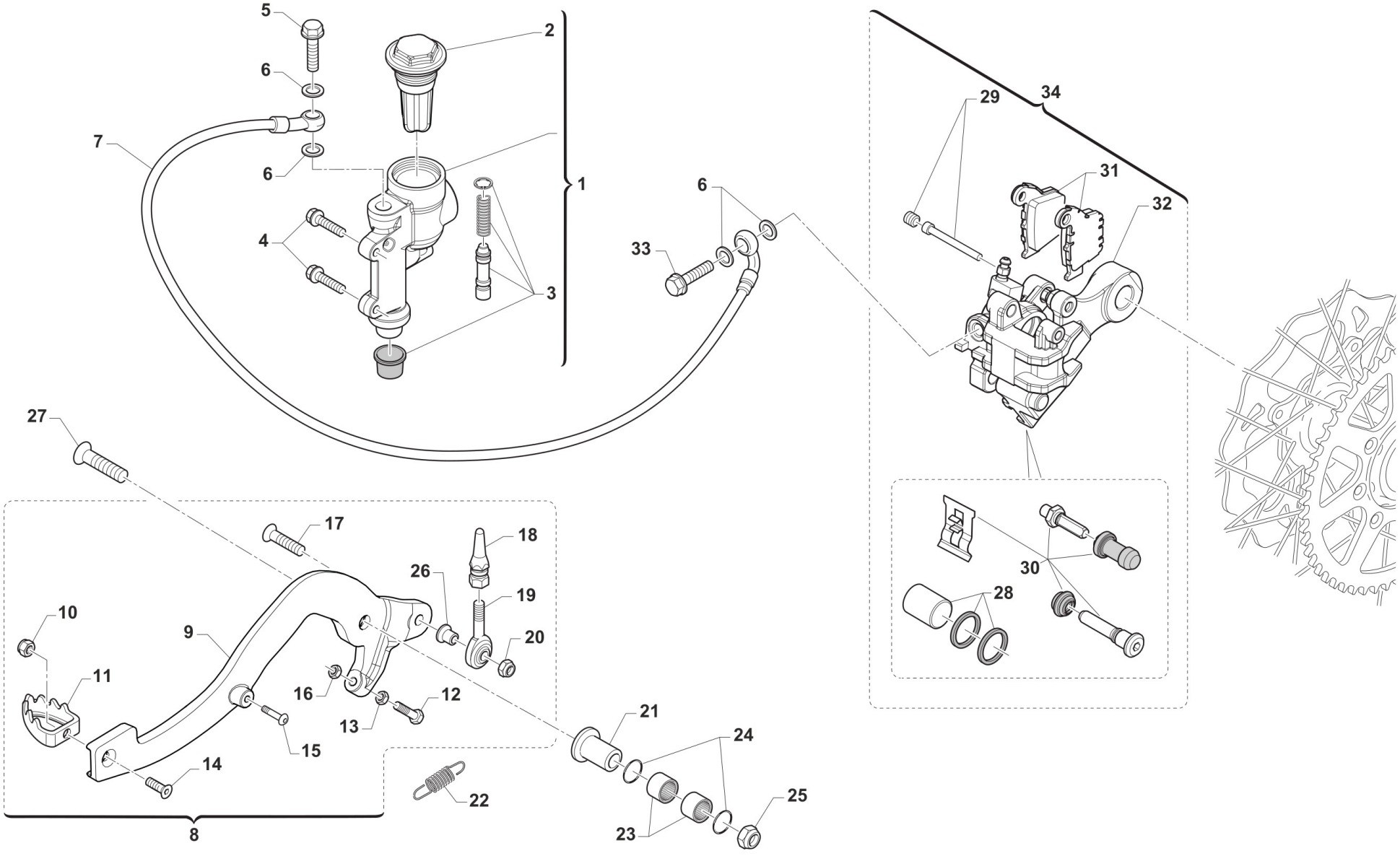
5
2
6
7
6
1
4
3
6
33
34
29
31
32
27
17
18
26
19
10
9
20
11
16
12
13
21
24
15
14
22
25
23
8
TM0120

Pos.	Codice	Q.tà	Note	Descrizione	Description
1	69243	1		POMPA FRENO POST 85J 13/-> BRE	MASTER CYLINDER, REAR 85J 13->
2	69264	1		TAPPO POMPA FRE.POST.JUNIOR	CAP + RUBBER, REAR BRAKE PUMP JUNIOR
3	69263	1		FLOTTANTE POMPA FRENO POST.JUNIOR	REPAIRASSY, RR BRAKE PUMP JUNIOR MY13->
4	49355	2		VITE TE F/R 6X16 Ch.8	BOLT 6X16 T.8
5	69093	1		BULLONE 10X1 TUBO FRENO BREMBO 03	HOLLOW SCREW M10X1 BREMBO BR.
6	69034	4		RONDELLA X BULLONE FREN B22001	WASHER B22001, BRAKE HOSE
7	69068.13	1		TUBO FRENO POST. JUNIOR M13-> BRAK	HOSE, REAR BRAKE 85J M.13->
8	69235	1		PEDALE FRENO POST.JUN'13 CPL	BRAKE PEDAL, REAR JUN.13->ASSY
9	69235.1	1		PEDALE FRENO POST.JUN'12 NUDO	BRAKE PEDAL RR JUNIOR M.12->
10	49633	1		DADO M 5 BASSO AUTOBLOCCANTE	NUT 5mm, LOW SELF-LOCKING
11	69002.99	1		PARTE ANT.PED.FRENO POST.99/->	PIT, RR BRAKE PEDAL 99/->
12	49444	1		VITE TE 6X25	BOLT TE 6 X 25
13	49635	1		DADO M 6 BASSO 5589	NUT M 6
14	49400	1		VITE TSEI 5X14	BOLT TSEI 5x14
15	49557	1		VITE TBCE 4X16	BOLT TBCE 4x16
16	49367	2		VITE TE F/R 8X45 Ch.10	BOLT 8X45 T.10mm
17	49414	1		VITE TSPEI 6X30 NORMALE UNI 5933	BOLT TSEI 6X30
18	69244	1		PERNO UNIBALL PEDALE FR.JUN'13	PIN UNIBALL BRAKE PEDAL JUN.13
19	69133	1		SNODO SFERICO PED.FRENO 85JM13	JOINT BRAKE PEDAL 85cc M13->
20	49367	1		VITE TE F/R 8X45 Ch.10	BOLT 8X45 T.10mm
21	69205	1		BOCCOLA FRENO POST T.AL 08/->	BUSH, REAR BRAKE 08/->
22	F16434	1		MOLLA PEDALE FRENO M.08 T.AL.	SPRING, RR BRAKE PEDAL 08/->
23	19044	2		GABBIA A RULLI FRENO POST.	NEEDLE BUSH REAR BRAKE PEDAL
24	12051	2		O RING FRENO POST. PEDALE	O-RING REAR BRAKE PEDAL BUSH
25	49680	1		DADO M 8 X 1,25 CH 12 FLANG. AUTOBLOCK	NUT, M 8X1,25 FLANG. SB
26	69245	1		DIST. UNIBALL PEDALE FR.JUN'13	SPACER, UNIBALL
27	49427	1		VITE TSEI 8X55	BOLT TSEI 8X55

Pos.	Codice	Q.tà	Note	Descrizione	Description
28	69253	1		KIT PISTONE+ OR PINZA FRENO POST d.25 BRAKING JUNIOR	PISTON+O-RING REAR CALIPER BRAKING JUNIOR
29	69280	1		PERNO + GRANO PAST. ANT/POST BRAKING JUNIOR	PIN+GRUB ANT/POST BRAKING JUNIOR
30	69254	1		KIT VITI + CUFFIE + LAMIERINO PINZA ANT/POST BRAKING JUNIOR	BOLT+RETAINER BRAKE PAD ANT/POST JUNIOR
31	69247	1		PASTIGLIE ANT. / POST. JUNIOR M.13->	PAD KIT, F.&R. CALIPER J 13
32	69241	1		SUPPORTO PINZA PST.BRAKING J13	HOLDER, REAR BRAKE CALIPER J13
33	69094	1		BULLONE 10X1.25 T.FRENO NISSIN 03	BOLT,10X1,25 BRAKE HOSE NISSIN
34	69242	1		PINZA FRENO POST. JUNIOR M.13->	REAR BRAKE CALIPER D.25mm

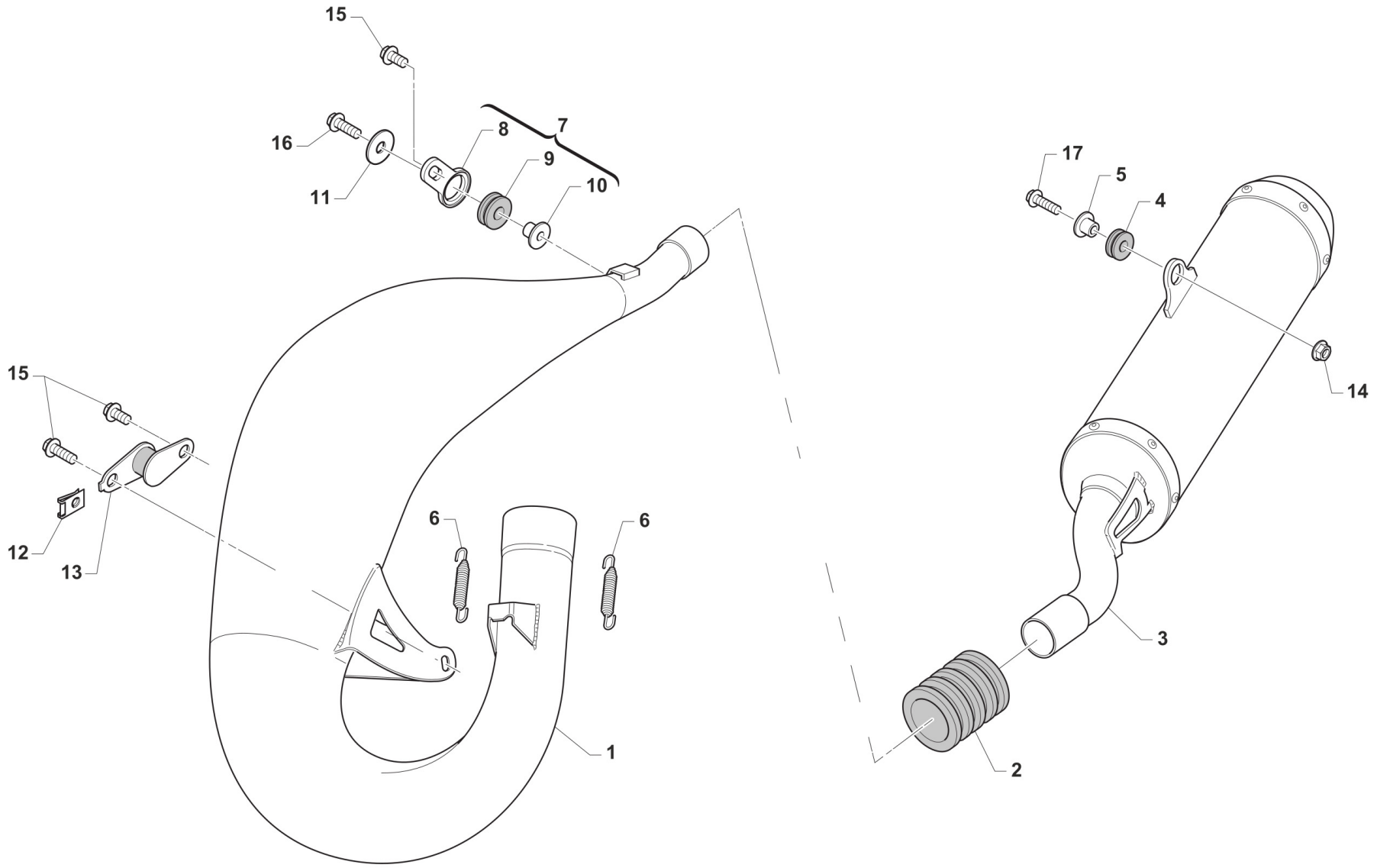

TM0121

Pos.	Codice	Q.tà	Note	Descrizione	Description
1	27208	1		MARMITTA 112 Junior MY21-> HGS	
2	21019	1		MANICOTTO SILENZIATORE SILICONE 97 ->	RUBBER, SILENCER/PIPE 97/->
2	21078	1		MANICOTTO MARMIT/SILENZ. SILICONE 85cc BLU	
3	27209	1		SILENZIATORE 112 JUN. MY21-> HGS	
4	21008	1		GOMMINO ANTIVIBR.RAD.K.SILENZ.	RUBBER, GROMMET RADIATOR/SILEN
5	26117	1		BOCCOLA SILENZIATORE 09->	BUSH, SILENCER M.09->11
6	16051	2		MOLLA TR.SCARICO BIC. KF3/85j	SPRING, EXHAUST KF3/85j
7	21094	1		SILENT BLOCK 05 PIAST+GOMM+BOC	SILENT BLOCK 05 ASSY PL+RU+BU
8	21093	1		PIASTRINO SILENT BLOCK 05 NUDO	PLATE, SILENT BLOCK 05
9	21102	1		GOMMINO ANTIV.RADIAT.SILENZ. MY 94->	RUBBER, GROMMET RADIATOR and SILENC.
10	26074	1		BOCCOLINA X SILENT-BLOCK 21094	BUSH FOR SILENT-BLOCK COD21094
11	26084	1		RONDELLA PARAF ANT. 24x2 M.08	WASHER, FRONT FENDER 24 X 2
12	49803	1		PRESTOLA SILENT BLOCK MARMITTA	RANGE CHANGE METAL NUT M6
13	21111	1		SILENT BLOCK MARMITTA M.94->	SILENT BLOCK EXHAUST PI.M.94->
14	49676	1		DADO M 6X1 FLANG. AUTOBL.ACC.	NUT, FLANGED M6 X 1 S.B.
15	49355	3		VITE TE F/R 6X16 Ch.8	BOLT 6X16 T.8
16	49356	1		VITE TE F/R 6X20 Ch.8	BOLT 6X20 T.8
17	49359	1		VITE TE F/R 6X35 Ch.8	BOLT 6X35 T.8

1

5

2

3

4

6

7

8

KA27-J

Pos.	Codice	Q.tà	Note	Descrizione	Description
1	94088.27	1		KIT ADESIVI JUNIOR TM MOTO MY27 S/CIL.	
2	94361.85	1		KIT AD. CIL. 85 JUNIOR TM MOTO MY27	
3	94361.100	1		KIT AD. CIL.100 JUNIOR TM MOTO MY27	
4	94361.112	1		KIT AD. CIL.112 JUNIOR TM MOTO MY27	
5	94362.27	1		KIT ADESIVI JUNIOR TM CORSE MY27 S/CIL.	
6	94363.85	1		KIT AD. CIL. 85 JUNIOR TM CORSE MY27	
7	94363.100	1		KIT AD. CIL.100 JUNIOR TM CORSE MY27	
8	94363.112	1		KIT AD. CIL.112 JUNIOR TM CORSE MY27	